INNOMOTICS

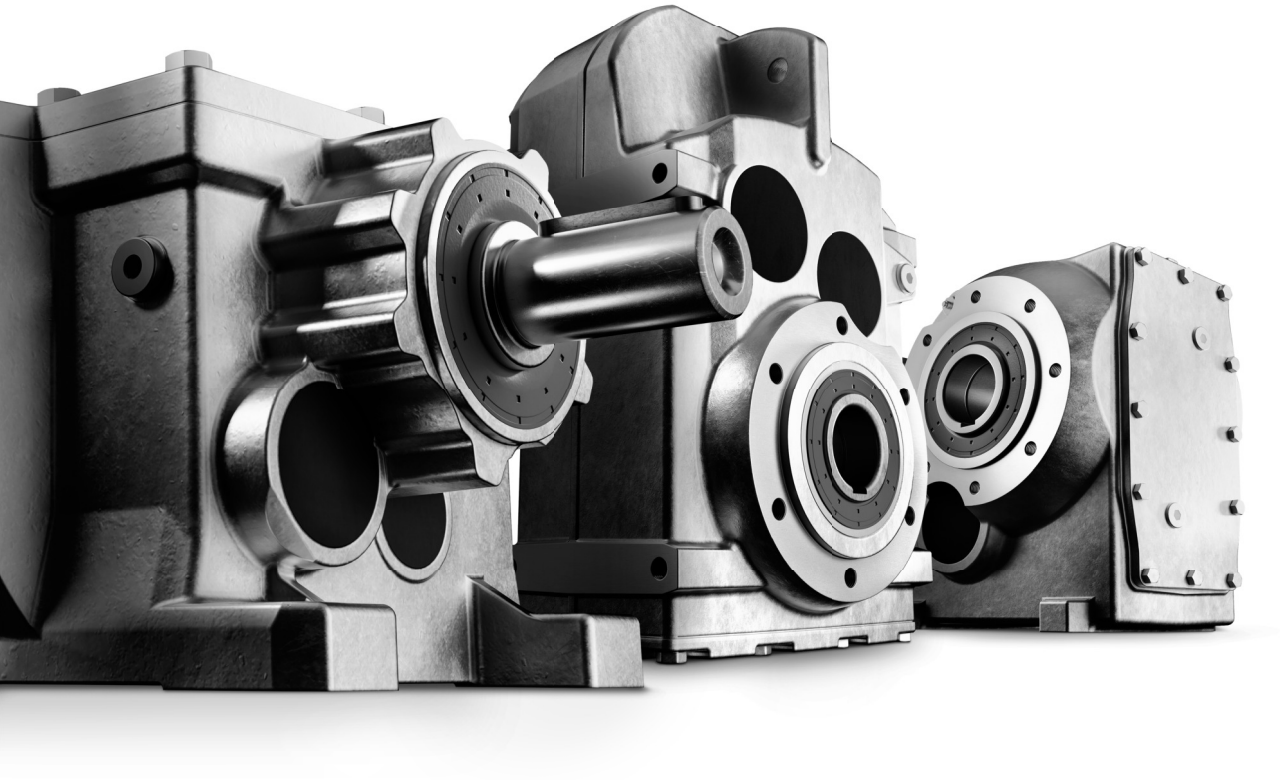

Original Installation and Operating Instructions | Edition 08/2024

Innomotics Moves!

SG geared motors
Gearbox

2030 – E, D, Z, FD, FZ, B, K, C, S

innomotics.com/geared-motors

Geared motors
Gearboxes - E, D, Z, FD, FZ, B, K, C, S

Operating Instructions

Introduction 1

Fundamental safety instructions 2

Specific safety instructions 3

Technical description 4

Goods received, transport and storage 5

Mounting 6

Commissioning 7

Operation 8

Faults, causes and remedies 9

Service and maintenance 10

Disposal 11

Technical data 12

Spare parts 13

Declaration of incorporation of partly completed machinery, Declaration of Conformity 14

Translation of the original instructions
08/2024
A5E53582310A/RS-AA

Legal information

Warning notice system

This manual contains notices you have to observe in order to ensure your personal safety, as well as to prevent damage to property. The notices referring to your personal safety are highlighted in the manual by a safety alert symbol, notices referring only to property damage have no safety alert symbol. These notices shown below are graded according to the degree of danger.

⚠ **DANGER**
indicates that death or severe personal injury **will** result if proper precautions are not taken.

⚠ **WARNING**
indicates that death or severe personal injury **may** result if proper precautions are not taken.

⚠ **CAUTION**
indicates that minor personal injury can result if proper precautions are not taken.

NOTICE
indicates that property damage can result if proper precautions are not taken.

If more than one degree of danger is present, the warning notice representing the highest degree of danger will be used. A notice warning of injury to persons with a safety alert symbol may also include a warning relating to property damage.

Qualified Personnel

The product/system described in this documentation may be operated only by **personnel qualified** for the specific task in accordance with the relevant documentation, in particular its warning notices and safety instructions. Qualified personnel are those who, based on their training and experience, are capable of identifying risks and avoiding potential hazards when working with these products/systems.

Proper use of Innomotics products

Note the following:

⚠ **WARNING**
Innomotics products may only be used for the applications described in the catalog and in the relevant technical documentation. If products and components from other manufacturers are used, these must be recommended or approved by Innomotics. Proper transport, storage, installation, assembly, commissioning, operation and maintenance are required to ensure that the products operate safely and without any problems. The permissible ambient conditions must be complied with. The information in the relevant documentation must be observed.

Trademarks

All names identified by ® are registered trademarks of Innomotics GmbH. The remaining trademarks in this publication may be trademarks whose use by third parties for their own purposes could violate the rights of the owner.

SIEMENS, SIMOTICS, SINAMICS and SIMOTION are registered trademarks of Siemens AG or its affiliated companies whose use by third parties for their own purposes could violate the rights of the respective owner.

Disclaimer of Liability

We have reviewed the contents of this publication to ensure consistency with the hardware and software described. Since variance cannot be precluded entirely, we cannot guarantee full consistency. However, the information in this publication is reviewed regularly and any necessary corrections are included in subsequent editions.

Innomotics GmbH
Vogelweiherstr. 1-15
90441 NÜRNBERG
GERMANY

A5E53582310A/RS-AA
Ⓟ 09/2024 Subject to change

Copyright © Innomotics 2024.
All rights reserved

Table of contents

1 Introduction ... 9

1.1 About Innomotics geared motors ... 9

1.2 Sales legislation ... 9

1.3 About this manual ... 10
1.3.1 Content ... 10
1.3.2 Target group ... 10
1.3.3 Preventing hazards ... 11
1.3.4 What is new in 2030_0824? ... 11
1.3.5 Standard scope ... 11
1.3.6 Websites of third-party companies ... 12

1.4 Documentation ... 12

1.5 Documentation on the Internet ... 13

1.6 Service and support ... 13
1.6.1 Service, support, and contact persons ... 13
1.6.2 Documentation on the web ... 14
1.6.3 Spare parts services ... 14

1.7 Important product information ... 14
1.7.1 Intended use ... 14
1.7.2 Predictable incorrect use ... 16

2 Fundamental safety instructions ... 17

2.1 General safety instructions ... 17

2.2 Equipment damage due to electric fields or electrostatic discharge ... 23

2.3 Cybersecurity information ... 23

2.4 Residual risks during operation ... 24

3 Specific safety instructions ... 27

3.1 General overview ... 27

3.2 Installation notes ... 29

3.3 Residual risks when operating geared motors ... 31

3.4 Geared motor with safety-relevant component for safety-relevant applications ... 31

3.5 Specific hazard types and fundamental obligations ... 32

4 Technical description ... 33

4.1 General technical description ... 33

4.2 Technical description of the XLplus and VLplus heavy-duty bearing systems ... 34

4.3 Shaft seals ... 34

4.4 Cooling ... 35

4.5 Rating plate ... 35

4.6 Surface treatment ... 36
4.6.1 General information on surface treatment ... 36
4.6.2 Painted version ... 37
4.6.3 Primed version ... 39

4.7 Ex ignition hazards in accordance with EN 80079-37 ... 40

5 Goods received, transport and storage ... 41

5.1 Incoming goods ... 41

5.2 Transport ... 41
5.2.1 General information on transport ... 41
5.2.2 Fastening for suspended transport ... 42

5.3 Storage ... 44
5.3.1 General information for storage ... 44
5.3.2 Storage up to 36 months with long-term preservation (optional) ... 44
5.3.2.1 General notes for storage up to 36 months ... 44
5.3.2.2 Gearbox filled with operating oil and anti-corrosive agent ... 45
5.3.2.3 Gearbox completely filled with oil ... 45

6 Mounting ... 47

6.1 Unpacking ... 47

6.2 General information on installation ... 47

6.3 Thread sizes and tightening torques for fixing screws ... 48

6.4 Gearbox with foot mounting ... 49

6.5 Gearbox with flange fastening ... 50

6.6 Gearboxes in foot or flange version ... 51

6.7 Gearbox with C-type housing flange ... 52

6.8 Mounting an input or output element on the gearbox shaft ... 52

6.9 Removing and installing the protection cover ... 54

6.10 Mounting and removing the slip-on gearbox ... 56
6.10.1 General information on installing the shaft-mounted gearbox ... 56
6.10.2 Hollow shaft with feather key ... 57
6.10.2.1 Mounting the hollow shaft with parallel key ... 57
6.10.2.2 Removing the hollow shaft with parallel key ... 58
6.10.3 Hollow shaft with shrink disk ... 60
6.10.3.1 Mounting the hollow shaft with shrink disk ... 60
6.10.3.2 Mounting the shrink disk ... 61
6.10.3.3 Pulling off the shrink disk ... 63
6.10.3.4 Cleaning and lubricating shrink disks ... 64
6.10.4 ShaftMount assembly system ... 64
6.10.4.1 General notes for the ShaftMount assembly system ... 64
6.10.4.2 Attaching the ShaftMount assembly system ... 66
6.10.4.3 Removing the ShaftMount assembly system ... 68
6.10.5 Hollow shaft with splines ... 69
6.10.6 Torque arms for slip-on gearboxes ... 70

6.10.6.1 General information regarding torque arms ... 70
6.10.6.2 Mounting torque arms on parallel shaft gearboxes ... 70
6.10.6.3 Mounting torque arms on bevel gearboxes and helical worm gearboxes ... 71
6.10.6.4 Attaching the torque arm to worm geared motor S ... 72

7 Commissioning ... 75

7.1 General information about commissioning ... 75

7.2 Checking the oil level prior to commissioning ... 75

7.3 Mount the oil expansion unit ... 76

7.4 Electrical oil level check (optional) ... 77
7.4.1 General information ... 77
7.4.2 Mounting the oil level control ... 77

7.5 Electrical oil temperature monitoring (optional) ... 79
7.5.1 General information ... 79
7.5.2 Mounting the oil temperature monitor ... 80

7.6 Options of the VLplus heavy-duty bearing system ... 81
7.6.1 Automatic regreasing device ... 81
7.6.2 Dry-well version with oil sensor ... 84

8 Operation ... 85

9 Faults, causes and remedies ... 87

10 Service and maintenance ... 91

10.1 General notes about maintenance work ... 91

10.2 Parts subject to wear ... 93

10.3 Checking and changing lubricants ... 94
10.3.1 General safety notes ... 94
10.3.2 Checking the oil level ... 96
10.3.3 Check the oil level for gearboxes with higher oil level in mounting position M4 ... 97
10.3.4 Check the oil level for gearboxes with higher oil level in mounting position M6 ... 99
10.3.5 Checking the oil level using the oil sight glass (optional) ... 102
10.3.6 Checking the oil level using the oil dipstick (optional) ... 102
10.3.7 Checking the oil quality ... 103
10.3.8 Changing the oil ... 104
10.3.8.1 General safety notes for changing the oil ... 104
10.3.8.2 Draining the oil ... 104
10.3.8.3 Flushing the gearbox when changing between incompatible oils ... 105
10.3.8.4 Filling in oil ... 106
10.3.9 Topping up with oil ... 106
10.3.10 Change the roller bearing grease ... 107
10.3.11 Service life of the lubricants ... 107
10.3.12 Recommended lubricants ... 109

10.4 Lubrication of the XLplus and VLplus heavy-duty bearing systems ... 111

10.5 Replace bearings ... 114

10.6 Checking the gearbox for leaks ... 114

10.7 Replacing the vent valve ... 114

10.8 Checking the oil level sensor (optional) ... 115
10.9 Cleaning gearbox and motor ... 115
10.10 Checking tightness of fastening bolts ... 116
10.11 Thread sizes and tightening torques for fixing screws ... 116
10.12 Inspecting the gearbox ... 116
10.13 Replacing the hose of the oil expansion unit ... 117

11 Disposal ... 119

12 Technical data ... 121

12.1 Type designation ... 121
12.2 Serial number coding ... 123
12.3 QR code on the rating plates ... 123
12.4 Rating plate data ... 124
12.4.1 General technical data ... 124
12.4.2 Gearbox rating plate ... 124
12.4.3 Converter world motor rating plate ... 125
12.4.4 Rating plate of geared motors without a UL/CSA version ... 127
12.4.5 Rating plate of geared motors with a UL/CSA version ... 129
12.4.6 Additional plate geared motors for converter operation ... 130
12.4.7 Identification label for combinations of motors and gearboxes with adapter ... 131
12.4.7.1 Combinations with Innomotics 1LE1, 1MB1 and SIMOTICS S-1FK2, S-1FK7, S-1FT7, 1PH8 motors ... 131
12.4.7.2 Explanation of the motor rating plate data ... 132
12.4.8 Rating plate of a worm geared motor S ... 132
12.4.8.1 Rating plate of a worm gearbox or worm geared motor ... 132
12.4.8.2 Example of a 1LE motor rating plate ... 133
12.4.8.3 Example of a 1LE motor rating plate with CCC version ... 135
12.4.9 Rating plate for geared motors in Ex version ... 136
12.4.10 Additional Customer Info Label ... 137
12.4.11 Product marking UKCA (United Kingdom Conformity Assessed) ... 137
12.4.12 Repair rating plate for Ex ... 138
12.5 Weight ... 138
12.6 Sound energy level ... 138
12.7 Mounting positions ... 139
12.7.1 General notes on mounting positions ... 139
12.7.2 Single-stage helical gearboxes ... 140
12.7.3 Two- and three-stage helical gearbox ... 142
12.7.4 Parallel shaft gearbox ... 149
12.7.5 Bevel gearbox ... 155
12.7.6 Helical worm gearbox ... 164
12.7.7 Worm gearbox ... 172
12.7.8 Tandem gearbox/gearbox with slow input speed - intermediate helical gearbox or drive unit ... 173
12.8 Oil quantities ... 176
12.8.1 Helical gearbox ... 176

12.8.2 Parallel shaft gearbox ... 177
12.8.3 Bevel gearbox ... 179
12.8.4 Helical worm gearbox ... 180
12.8.5 Tandem gearbox/gearbox with slow input speed - intermediate helical gearbox or drive unit ... 181
12.8.5.1 Two- and three-stage helical gearboxes ... 181
12.8.5.2 Parallel shaft gearboxes ... 182
12.8.5.3 Bevel gearbox ... 184
12.8.5.4 Helical worm gearboxes ... 186

13 Spare parts ... 189

13.1 Stocking of spare parts ... 189

13.2 Spares on Web ... 190

13.3 Spare parts lists ... 191
13.3.1 Helical gearbox E, sizes 39 - 149 ... 191
13.3.2 Helical gearbox D / Z, sizes 19 - 189 ... 193
13.3.3 Parallel shaft gearbox F, sizes 29 - 189 ... 195
13.3.4 Bevel gearbox B, sizes 19 - 49 ... 197
13.3.5 Bevel gearbox K, sizes 39 - 189 ... 199
13.3.6 Helical worm gearbox C, sizes 29 - 89 ... 202
13.3.7 Worm geared motor S, frame sizes 09 - 29 ... 204
13.3.8 ShaftMount assembly system, sizes 29 - 89 ... 205
13.3.9 XLplus and VLplus heavy-duty bearing systems, sizes 89-169 ... 207

14 Declaration of incorporation of partly completed machinery, Declaration of Conformity ... 209

Introduction 1

Note

Siemens Businesses **Large Drives Applications** and **Low Voltage Motors** have been transferred over to **Innomotics**. The rebranding process from Siemens to Innomotics is ongoing.

Legal information, trademarks or logos of Siemens or Innomotics contained in product-related documents **do not necessarily represent the particular product brand**. All technical product information is and **remains valid independent of the brand**.

1.1 About Innomotics geared motors

Description

Innomotics SG is the geared motor product family.

1.2 Sales legislation

Typical use cases are listed in this product documentation and in the online help to illustrate possible application areas for our products. These are purely exemplary and do not constitute a statement relating to the suitability of the respective product for use in specific individual cases. Unless explicitly agreed as part of a contract, Innomotics assumes no liability relating to such suitability. Suitability for a particular application in specific individual cases must be assessed by the user on a case-for-case basis, taking into account all technical, legal and other requirements. Always observe the descriptions of the technical features and the relevant constraints of the respective product provided in the product documentation.

1.3 About this manual

1.3.1 Content

Description

These operating instructions provide you with information about the geared motors and their associated components. You will learn about safely and professionally handling the geared motors – from the initial delivery up to final disposal:

- Transporting and storing
- Setup and mounting
- Connecting
- Commissioning
- Testing
- Operating
- Searching for and eliminating faults
- Disassembly
- Disposal

Keeping the documentation in a safe place

This documentation should be kept in a location where it can be accessed. Make the documentation available to the personnel that have been deployed.

Description

This documentation includes recommendations relating to third-party products. Innomotics is aware of the fundamental suitability of these third-party products. You can use equivalent products from other manufacturers.

Innomotics does not accept any warranty when using third-party products.

1.3.2 Target group

Description

These operating instructions address all personnel who work on a geared motor or use a geared motor.

1.3.3 Preventing hazards

The safety instructions provided in these operating instructions are intended to avoid personal injury and material damage. They also guarantee the function and a long service life of the geared motors.

- Read these operating instructions before handling the geared motors.
- Always follow the safety instructions and notices in these operating instructions.

The warning note concept is explained at the beginning of this documentation.

1.3.4 What is new in 2030_0824?

Main changes in this edition

Supplements

- Chapter Geared motor with safety-relevant component for safety-relevant applications (Page 31) revised.
- Description serial number, year of manufacture and QR code - Technical data (Page 121)
- Rating plate corrected, year of manufacture, QR code, high temperature, switch-on duration for brakes (CDF) added -> Rating plate data (Page 124)
- Customer label added - Additional Customer Info Label (Page 137)

Revisions

- Siemens replaced by Innomotics
- Front covers U1 and U4 new

1.3.5 Standard scope

Description

This documentation describes the functionality of the standard scope. This scope may differ from the scope of the functionality of the system that is actually supplied. The functions of the system delivered can only be found in the order documents.

Additional functions may be able to be executed in the system, which are not explained in this documentation. However, these functions cannot be claimed in the case of a new delivery or service.

This documentation does not contain all detailed information on all product types. Furthermore, this documentation cannot take into consideration every conceivable type of installation, operation and service/maintenance.

The machine manufacturer must document any additions or modifications made to the product.

1.3.6 Websites of third-party companies

Description

This document may contain hyperlinks to third-party websites. Innomotics assumes absolutely no responsibility for the contents of these websites nor does Innomotics adopt these websites and their contents as its own. Innomotics does not check the information that appears on these websites and is not responsible for the content and information provided there. The user bears the full risk when visiting these websites.

1.4 Documentation

Description

You can find comprehensive documentation on the Internet (www.innomotics.com).

You can display documents or download them in the PDF and HTML5 format.

The documentation is divided into the following categories:

Information	Documentation class[1)]	Content	Target group
General information	Configuration Manual	Rules, guidelines and tools for configuring products, systems, and plants. Further: Information about the operating and ambient conditions for hardware and software, the use of functions, as well as about circuit diagrams and terminal diagrams and the installation of software assuming that this is necessary for commissioning.	Planners, application engineers
Device information	Installation Instructions	All relevant information on setting up, installing and cabling as well as the required dimension drawings and circuit diagrams	Installation personnel, commissioning engineers, service and maintenance personnel

Information	Documentation class[1]	Content	Target group
Basic information	Operating instructions	Comprehensive collection of all information necessary for the safe operation of products, plant/system parts and complete plants (IEC 82079)	Machine operators, plant operators
	Compact instructions	Essential contents of the operating instructions in abbreviated and compressed form	Machine operators, plant operators
	Product Information	Information that only becomes known shortly before or even after start of delivery and is therefore not included in the associated user documentation	Planners, configuration engineers, technologists, installation personnel, constructors; commissioning engineers, machine operators, programmers, service and maintenance personnel
	Online help	Instructions for configuring, programming and commissioning	Application engineers, programmers, commissioning engineers

[1] Not all documentation classes are available for every product.

1.5 Documentation on the Internet

The manuals for the motors, gearboxes and geared motors are available here: Innomotics Download Center (https://www.innomotics.com/hub/en/search/entrypages/productinformation)

1.6 Service and support

1.6.1 Service, support, and contact persons

Service and support

More detailed information on technical support, repair inquiries, general overhauls, spare parts or complaints can be found here (https://www.portal.innomotics.com/hub/en/serviceticket/form).

Contact person

In addition to the familiar contacts in the region for Innomotics service, you can find more partners in your area here (https://www.portal.innomotics.com/hub/en/partnerfinder/list).

1.6.2 Documentation on the web

Description

QR code

The QR code on the rating plate gives you online access to the individual product details.

More information can be found under Innomotics (https://www.innomotics.com/hub/en/portfolio/products/geared-motors).

1.6.3 Spare parts services

Description

The online spare part service "Spares on Web" offers certain spare parts for the product:

- Website: SOW address (https://www.innomotics.com/hub/en/customer-service/spare-parts).

1.7 Important product information

1.7.1 Intended use

Ex-version gearboxes

The Ex gearbox fulfills the requirements of the Explosion Protection Directive 2014/34/EU and the UK Directive UK SI 2016:1107.

In the case of Ex-version gearboxes, observe the instructions marked with this symbol.

Designation of the gearbox		Use in zones with explosive gases, Zone:	Gas group of combustible liquid	Temperature Class of combustible liquid
	II 2G Ex h IIB T4 Gb	1, 2	IIA, IIB	T1 - T4
	II 2G Ex h IIC T4 Gb	1, 2	IIA, IIB, IIC	T1 - T4

Designation of the gearbox		Use in zones with explosive gases, Zone:	Gas group of combustible liquid	Temperature Class of combustible liquid
	II 3G Ex h IIB T4 Gc	2	IIA, IIB	T1 - T4
	II 3G Ex h IIC T4 Gc	2	IIA, IIB, IIC	T1 - T4

Designation of the gearbox		Use in zones with explosive dusts, Zone:	Dust group of combustible dusts	Minimum ignition temperature of the explosive dusts
	II 2D Ex h IIIB T120°C Db	21, 22	IIIA, IIIB	>120 °C
	II 2D Ex h IIIC T120°C Db	21, 22	IIIA, IIIB, IIIC	>120 °C
	II 3D Ex h IIIB T120°C Dc	22	IIIA, IIIB	>120 °C
	II 3D Ex h IIIC T120°C Dc	22	IIIA, IIIB, IIIC	>120 °C

Note

Gearboxes and geared motors are partly completed machines for installation into machinery, or other partly completed machinery or equipment or plants, within the meaning of the current EC Machinery Directive 2006/42/EC and the UK directive "Supply of Machinery (Safety) Regulations 2008".

Based on the area of validity of these directives, commissioning is prohibited until it has been absolutely identified that the end product is in conformance with these directives.

The gearboxes and geared motors have been designed for stationary use in general mechanical engineering applications.

Unless otherwise agreed, the gearboxes and geared motors are intended for use in commercial applications in machinery, other partly completed machinery, or equipment or plants.

The gearboxes and geared motors are shipped in an operationally safe condition. Changes made by users could affect this operational reliability and are forbidden.

Note

The data on the rating plate assumes an installation altitude of up to 1 000 m above sea level.

The permissible ambient temperature is stamped on the rating plate.

For different installation altitudes and ambient temperatures, contact Technical Support.

The gearboxes have been designed for the applications described in the Technical data (Page 121). Do not operate the gearbox outside the specified power limit. Other operating conditions must be contractually agreed.

Additional information for combinations of gearbox, adapter and motor

If motors are not mounted directly to the gearboxes (but instead via adapters), the company operating the motors must carefully ensure that the combination of gearbox, adapter and motor is only operated within the specified operating ranges and power limits of the motor component and the gearbox component.

The operating ranges and power limits of both components must be observed. For operating ranges and power limits of the gearboxes or geared motors, refer to Chapter Technical data (Page 121).

The motor has been designed solely for the operating range described in the operating instructions applicable to the motor. Do not operate the motor outside its specified power limits. The applications that can be addressed by the motor and the power limits are stamped on the rating plate.

Do not climb on the gearbox. Do not place any objects on the gearbox.

1.7.2 Predictable incorrect use

⚠ WARNING

Injuries due to incorrect use

Death or severe injury can occur if you use the gearbox or the geared motor other than in the way intended by Innomotics. You destroy or damage the gearbox or the geared motor.

Incorrect use includes, for example

- Not complying with the operating instructions
- Not observing the data on the rating plate
- Using the gearbox or geared motor in hazardous zones
- Using the gearbox or geared motor outside the permissible ambient conditions
- Using the gearbox or geared motor as generator
- Using the motor holding brake as an operating brake to reduce the motor speed
- Using the gearbox or geared motor as a result of its size, its weight, its shape or its material for applications other than those precisely described in this manual

Fundamental safety instructions 2

2.1 General safety instructions

WARNING

Electric shock and danger to life due to other energy sources

Touching live components can result in death or severe injury.

Generally, the following steps apply when establishing safety:

1. Only work on electrical devices when you are qualified for this job.
2. Always observe the country-specific safety rules.
3. Prepare for disconnection. Notify all those who will be affected by the procedure.
4. Isolate the drive system from the power supply and take measures to prevent it being switched back on again.
5. Wait until the discharge time specified on the warning labels has elapsed.
6. Check that there is no voltage between any of the power connections, and between any of the power connections and the protective conductor connection.
7. Check whether the existing auxiliary supply circuits are de-energized.
8. Ensure that the motors do not move.
9. Identify all other dangerous energy sources, e.g. compressed air, hydraulic systems, or water. Switch the energy sources to a safe state.
10. Check that the correct drive system is completely locked.
11. After you have completed the work, restore the operational readiness in the inverse sequence.

WARNING

Electric shock due to connection to an unsuitable power supply

When equipment is connected to an unsuitable power supply, exposed components may carry a hazardous voltage. Contact with hazardous voltage can result in severe injury or death.

- Only use power supplies that provide SELV (Safety Extra Low Voltage) or PELV- (Protective Extra Low Voltage) output voltages for all connections and terminals of the electronics modules.

WARNING

Electric shock due to equipment damage

Improper handling may cause damage to equipment. For damaged devices, hazardous voltages can be present at the enclosure or at exposed components; if touched, this can result in death or severe injury.

- Ensure compliance with the limit values specified in the technical data during transport, storage and operation.
- Do not use any damaged devices.

WARNING

Electric shock due to damaged motors or devices

Improper handling of motors or devices can damage them.

Hazardous voltages can be present at the enclosure or at exposed components on damaged motors or devices.

- Ensure compliance with the limit values specified in the technical data during transport, storage and operation.
- Do not use any damaged motors or devices.

WARNING

Electric shock due to unconnected cable shield

Hazardous touch voltages can occur through capacitive cross-coupling due to unconnected cable shields.

- As a minimum, connect cable shields and the conductors of power cables that are not used (e.g. brake cores) at one end at the grounded housing potential.

WARNING

Electric shock if there is no ground connection

For missing or incorrectly implemented protective conductor connection for devices with protection class I, high voltages can be present at open, exposed parts, which when touched, can result in death or severe injury.

- Ground the device in compliance with the applicable regulations.

⚠ WARNING

Electric shock due to unsuitable motor temperature evaluation system

Voltage flashovers to the electronics of the converter can occur in motors without safe electrical separation of the temperature sensors in accordance with IEC 61800-5-1 when the motor develops a fault.

- Install a temperature monitoring relay.
- Evaluate the temperature monitoring relay output using a digital input of the converter, e.g. using the "External fault" function.

⚠ WARNING

Arcing when a plug connection is opened during operation

Opening a plug connection when a system is in operation can result in arcing that may cause serious injury or death.

- Only open plug connections when the equipment is in a voltage-free state, unless it has been explicitly stated that they can be opened in operation.

NOTICE

Property damage due to loose power connections

Insufficient tightening torques or vibration can result in loose power connections. This can result in damage due to fire, device defects or malfunctions.

- Tighten all power connections to the prescribed torque.
- Check all power connections at regular intervals, particularly after equipment has been transported.

NOTICE

Damage to equipment due to unsuitable tightening tools.

Unsuitable tightening tools or fastening methods can damage the screws of the equipment.

- Only use screw inserts that exactly match the screw head.
- Tighten the screws with the torque specified in the technical documentation.
- Use a torque wrench or a mechanical precision nut runner with a dynamic torque sensor and speed limitation system.
- Adjust the tools used regularly.

NOTICE

Damage to motor insulation due to excessive voltages

When operated on systems with grounded line conductors or in the event of a ground fault in the IT system, the motor insulation can be damaged by the higher voltage against ground. If you use motors that have insulation that is not designed for operation with grounded line conductors, you must perform the following measures:

- IT system: Use a ground fault monitor and eliminate the fault as quickly as possible.
- TN or TT systems with grounded line conductor: Use an isolating transformer on the line side.

WARNING

Unexpected machine movement caused by radio devices or mobile phones

Using radio devices, cellphones, or mobile WLAN devices in the immediate vicinity of the components can result in equipment malfunction or faults and damage to the devices. Malfunctions may impair the functional safety of machines and can therefore put people in danger or lead to property damage.

- Avoid operating radio devices, cellphones and mobile WLAN devices in the direct vicinity of converters and operating units.
- Scan the machine readable code, e.g. a QR code, from the farthest distance possible or switch off the converter power supply before scanning.
- Only operate built-in devices with the control cabinet doors closed.
- When control cabinet doors are open, only qualified electrical personnel are allowed to carry out service and maintenance work.

WARNING

Unrecognized dangers due to missing or illegible warning labels

Dangers might not be recognized if warning labels are missing or illegible. Unrecognized dangers may cause accidents resulting in serious injury or death.

- Check that the warning labels are complete based on the documentation.
- Attach any missing warning labels to the components, where necessary in the national language.
- Replace illegible warning labels.

WARNING

Unexpected movement of machines caused by inactive safety functions

Inactive or non-adapted safety functions can trigger unexpected machine movements that may result in serious injury or death.

- Observe the information in the appropriate product documentation before commissioning.
- Carry out a safety inspection for functions relevant to safety on the entire system, including all safety-related components.
- Ensure that the safety functions used in your drives and automation tasks are adjusted and activated through appropriate parameterizing.
- Perform a function test.
- Only put your plant into live operation once you have guaranteed that the functions relevant to safety are running correctly.

Note

Important Safety instructions for Safety Integrated

If you want to use Safety Integrated functions, you must observe the Safety instructions in the Safety Integrated documentation.

WARNING

Active implant malfunctions due to electromagnetic fields

Electromagnetic fields (EMF) are generated by the operation of electrical power equipment, such as transformers, converters, or motors. People with pacemakers or implants are at particular risk in the immediate vicinity of this equipment.

- If this affects you, maintain the minimum distance to such equipment that is specified in the "Important product information" chapter.

WARNING

Injury caused by moving or ejected parts

Contact with moving motor parts or drive output elements and the ejection of loose motor parts (e.g. feather keys) out of the motor enclosure can result in severe injury or death.

- Remove any loose parts or secure them so that they cannot be flung out.
- Do not touch any moving parts.
- Safeguard all moving parts using the appropriate safety guards.

WARNING

Fire due to inadequate cooling

Inadequate cooling can cause the drive to overheat, resulting in smoke and fire. Possible consequences can be serious injury or death. This can also result in increased downtime and reduced service life for drives.

- Comply with the specified cooling requirements for the drive.

WARNING

Fire due to incorrect operation of the motor

When incorrectly operated and in the case of a fault, the motor can overheat resulting in fire and smoke. This can result in severe injury or death. Further, excessively high temperatures destroy motor components and result in increased failures as well as shorter service lives of motors.

- Operate the motor according to the relevant specifications.
- Only operate the motors in conjunction with effective temperature monitoring.
- Immediately switch off the motor if excessively high temperatures occur.

CAUTION

Burns and thermal damage caused by hot surfaces

Temperatures above 100 °C may occur on the surfaces of motors, converters, and other drive components.

Touching hot surfaces may result in burns. Hot surfaces may damage or destroy temperature sensitive parts.

Measures when maintenance is required:

- Ensure that temperature-sensitive parts do not come into contact with hot surfaces.
- Mount drive components so that they are not accessible during operation.
- Allow drive components to cool off before starting any work.
- Use appropriate personnel protection equipment, e.g. gloves.

2.2 Equipment damage due to electric fields or electrostatic discharge

Electrostatic sensitive devices (ESD) are individual components, integrated circuits, modules or devices that can be damaged by either electrostatic fields or electrostatic discharge.

NOTICE
Equipment damage due to electric fields or electrostatic discharge Electric fields or electrostatic discharge can cause malfunctions through damaged individual components, integrated circuits, modules or devices. • Only pack, store, transport and send electronic components, modules or devices in their original packaging or in other suitable materials, e.g. conductive foam rubber or aluminum foil. • Touch components, modules and devices only when you have grounded yourself using one of the following measures: Wear an ESD bracelet Wear ESD shoes or ESD grounding strips in ESD areas with a conductive floor • Only place electronic components, modules or devices on conductive surfaces, for example table with ESD surface, conductive ESD foam, ESD packaging, ESD transport container.

2.3 Cybersecurity information

Innomotics provides products and solutions with industrial cybersecurity functions that support the secure operation of plants, systems, machines and networks.

In order to protect plants, systems, machines and networks against cyber threats, it is necessary to implement – and continuously maintain – a holistic, state-of-the-art industrial cybersecurity concept. Innomotics' products and solutions constitute one element of such a concept.

Customers are responsible for preventing unauthorized access to their plants, systems, machines and networks. Such systems, machines and components should only be connected to an enterprise network or the internet if and to the extent such a connection is necessary and only when appropriate security measures (e.g. firewalls and/or network segmentation) are in place.

For additional information on industrial cybersecurity measures that may be implemented, please visit:

https://innomotics.com/cybersecurity

Innomotics' products and solutions undergo continuous development to make them more secure. Innomotics strongly recommends that product updates are applied as soon as they are available and that the latest product versions are used. Use of product versions that are no longer supported, and failure to apply latest updates may increase customer's exposure to cyber threats.

⚠ WARNING

Unsafe operating states resulting from software manipulation

Software manipulations, e.g. viruses, Trojans, or worms, can cause unsafe operating states in your system that may lead to death, serious injury, and property damage.

- Keep the software up to date.
- Incorporate the automation and drive components into a state-of-the-art, integrated industrial cybersecurity concept for the installation or machine.
- Make sure that you include all installed products in the integrated industrial cybersecurity concept.
- Protect files stored on exchangeable storage media from malicious software by with suitable protection measures, e.g. virus scanners.
- Carefully check all cybersecurity-related settings once commissioning has been completed.

2.4 Residual risks during operation

The operation of gearboxes or geared motors and add-ons such as converters, encoders, etc. is only permitted if all protection equipment is used.

Drives may be handled only by qualified and instructed qualified personnel that knows and observes all safety instructions for the drives that are explained in the associated technical user documentation.

When assessing the machine or system-related risk in accordance with the respective local regulations (e.g. EC Machinery Directive), the machine manufacturer or system integrator

must take into account the following residual risks emanating from the control and drive components of a drive system:

1. Unintentional movements of driven machine components during commissioning, operation, maintenance, and repairs caused by, for example,
   - Hardware and/or software errors in the sensors, control system, actuators, and cables and connections
   - Response times of the control system and of the drive
   - Operation and/or environmental conditions outside the specification
   - Condensation/conductive contamination
   - Errors during the assembly, installation, programming and parameterization
   - Use of wireless devices/mobile phones in the immediate vicinity of the control system
   - External influences/damage
   - X-rays, ionizing radiation and cosmic radiation
2. Unusually high temperatures inside and outside the components, including open flames, as well as emissions of light, noise, particles, gases, etc. due to fault conditions, e.g.:
   - Component failure
   - Software errors in converter operation
   - Operation and/or environmental conditions outside the specification
   - External influences/damage
   - Short circuits or ground faults in the intermediate DC circuit of the converter
3. Hazardous shock voltages caused by, for example,
   - Component failure
   - Influence during electrostatic charging
   - Induction of voltages in moving geared motors
   - Operation and/or environmental conditions outside the specification
   - Condensation/conductive contamination
   - External influences/damage
4. Electrical, magnetic and electromagnetic fields generated in operation that can pose a risk to people with a pacemaker, implants or metal replacement joints, etc., if they are too close
5. Release of noxious substances and emissions in the case of improper operation and/or improper disposal of components
6. Influence of network-connected and wireless communications systems, e.g. ripple-control transmitters or data communication via the network or mobile radio, WLAN or Bluetooth
7. Motors for use in potentially explosive areas:
   When moving, components such as bearings are subject to wear, this can cause enclosure components to exhibit unexpectedly high temperatures during operation, creating a hazard in areas with a potentially explosive atmosphere.

For more information about the residual risks of the drive system components, see the relevant sections in the technical user documentation.

Specific safety instructions 3

3.1 General overview

Ex-version of gearbox and geared motor

This symbol marks notes and measures.

This symbol applies to gearboxes and geared motors in an Ex-version.

Note

Innomotics does not accept any liability for damage and operating faults that result from the non-observance of these operating instructions.

Note

EU RoHS Directive and UK Directive

The Innomotics SG series of geared motors comply with the stipulations laid down in Directive 2011/65/EU and the UK Directive "The Restriction of the Use of certain Hazardous Substances in Electrical and Electronic Equipment Regulations 2012" regarding the restriction of the use of specific hazardous substances.

These operating instructions are included with the gearbox when delivered or you can find them in the Innomotics Download Center (https://www.innomotics.com/hub/en/search/entrypages/productinformation). Read the operating instructions before handling the gearbox. Carefully follow the instructions. This is how you ensure safe and disturbance-free function.

These operating instructions apply to the standard version of the gearboxes:

Table 3-1 Definition of terms

Term	Explanation
Gearbox, gearbox component	Helical gearbox, parallel shaft gearbox, bevel gearbox, helical worm gearbox or worm gearbox
Motor, motor component, servomotor, asynchronous motor	Motor that is mounted on the gearbox.
Adapter	Mechanical assembly for transferring speed and torque from the motor to the gearbox.
Geared motor, gearbox and motor combination, unit, gearbox-adapter-motor-unit; overall drive	Mechanical assembly (unit) consisting of the components gearbox (adapter if applicable) and motor.

Note

In addition to these operating instructions, special contractual agreements and technical documentation apply to a special gearbox design and the associated supplementary equipment.

When using additional components, carefully observe the notes in the associated documentation.

Refer to the other operating instructions and safety instructions supplied with the product.

Valid operating instructions for Innomotics SG standard geared motors

These can be found in the Innomotics Download Center (https://www.innomotics.com/hub/en/search/entrypages/productinformation).

- 2030 - operating instructions for gearboxes
- 2031 - operating instructions for permissible mounting position deviations of gearboxes
- 2039 - operating instructions for adapters for mounting on gearboxes
- 2330 - operating instructions for motors for mounting on gearboxes
- 2331 - operating instructions for geared motor with DRIVE-CLiQ safety-related rotary encoder for safety-related applications
- 2332 - operating instructions for geared motors with holding brake for safety-related applications
- 2535 - operating instructions for electric monorail gearboxes
- 2730 - operating instructions for geared motors with rotary encoder for safety-related applications
- Operating instructions for geared motors for mounting onto a G115D Motor Mounted

Additional valid operating instructions for combinations of gearbox, adapter and motor

- Innomotics GP 1LE1 motors: Document ID A5E38483075A
- Innomotics XP 1MB1 motors: Document ID A5E41926185A
- Operating instructions SIMOTICS - S-1FK7 G2 synchronous motors
  Document ID A5E50907562A
  SIMOTICS S-1FK7 G2 synchronous motors (https://support.industry.siemens.com/cs/ww/en/view/109743519)
- Operating instructions SIMOTICS - S-1FT7 synchronous motors
  Document ID A5E50907611A
  SIMOTICS S-1FT7 synchronous motors (https://support.industry.siemens.com/cs/ww/en/view/109479725)
- Operating instructions SINAMICS/SIMOTICS - SIMOTICS S-1FK2 synchronous motors
  Document ID A5E41702836A
  SINAMICS/SIMOTICS S-1FK2 synchronous motors (https://support.industry.siemens.com/cs/ao/en/view/109801184)

- Operating instructions SIMOTICS - SIMOTICS M-1PH813/1PH816 main motors
  Document ID A5E50030782A
  SIMOTICS M-1PH813/1PH816 main motors (https://support.industry.siemens.com/cs/ww/en/view/109782099)
- Operating instructions SIMOTICS - SIMOTICS M-1PH808/1PH810 main motors
  Document ID A5E50030759A
  SIMOTICS M-1PH808/1PH810 main motors (https://support.industry.siemens.com/cs/ww/en/view/109792132)

Additional valid operating instructions

- Operating instructions Innomotics XP - 1MB..1/2/3/4 low-voltage motors - shaft heights 63 ... 355
  Document ID A5E44455710A

The described gearboxes and geared motors are state-of-the-art at the time these operating instructions were printed.

Innomotics reserves the right to change individual components and accessory parts in the interest of ongoing development. The changes serve to improve the performance and safety. The significant features are retained. The operating instructions are always being updated with new contents.

The version of the operating instructions, the declaration of incorporation and the Declarations of Conformity are available here (https://www.innomotics.com/hub/en/search/entrypages/productinformation).

3.2 Installation notes

NOTICE
Impermissible housing loadings when unevenness present Screw the housing feet and flange so that no distortion occurs. The foundation structure must be low-vibration, level and torsionally rigid. Ensure that the evenness of the mounting surface for gearboxes in foot and flange designs is in accordance with DIN ISO 2768-2. Take the maximum deviations from tolerance class K. Thoroughly remove any dirt from the foundation and the screw mounting surface of the gearbox.

NOTICE
Impermissible external forces No additional external forces resulting from customer-specific attachments, support of other components on the gearbox or geared motor are permitted. Mounting original attachments (e.g. oil expansion unit, cover hoods) and the resulting forces are permitted.

Prerequisites for smooth, vibration-free running

- Stable foundation design
- Precise alignment of the machine
- Correct balancing of the parts to be mounted on the shaft extension
- Compliance with vibration severity values according to ISO 20816-1

Vibration severity

Due to the influencing variables listed below, the vibration response of the system at the location of use can lead to increased vibration severity on the drive unit:

- Transmission elements
- Installation conditions
- Alignment and installation
- Effects of external and internal oscillation

Do not exceed the vibration severity values specified in accordance with ISO 20816-1 at any point on the surface of the drive. This ensures problem-free operation and a long service life.

Maximum permissible vibration severity

Carefully comply with the values for the maximum permissible radial and axial oscillation vibration severity in the following table. Radial/axial refers to the motor axes.

Maximum permissible radial vibration levels

Vibration frequency	Vibration value
< 6.3 Hz	Vibration displacement$_s$ ≤ 0.16 mm
6.3 to 250 Hz	Vibration velocity v_{rms} ≤ 4.5 mm/s
> 250 Hz	Vibration acceleration a_{peak} ≤ 10 m/s^2

Maximum permissible axial vibration severity

Vibration velocity	Vibration acceleration
Vibration velocity v_{rms} ≤ 4.5 mm/s	Vibration acceleration a_{peak} ≤ 10 m/s^2

Resonant frequencies

Resonance can occur in the speed range of the geared motor depending on the machine to be driven.

Operation in resonance causes increased noise and vibration levels.

Comply with the maximum permissible vibration class.

Operation at the resonant frequency leads to a reduced service life of the geared motor, irrespective of adherence to the maximum vibration severity.

Avoid continuous duty at the resonant frequency.

3.3 Residual risks when operating geared motors

The geared motors may be operated only if all protective equipment is used.

Geared motors may be handled only by qualified and instructed qualified personnel that knows and observes all safety instructions for the geared motors that are explained in the associated technical user documentation.

3.4 Geared motor with safety-relevant component for safety-relevant applications

For a geared motor with safety-relevant component for safety-relevant applications, carefully observe the information provided in operating instructions 2331 or 2730 for safety-relevant rotary encoder or 2332 for safety-relevant brake. These operating instructions are applicable for safety-relevant components, which are mounted onto the geared motor. The functionally safe components are in compliance with the relevant standards listed in the Declaration of Conformity for safety-relevant applications.

The geared motor with functionally safe component has a signal yellow marking on the fan cover. Marking SI04 for the functionally safe rotary encoder or LS for the safety-relevant brake is stamped on the rating plate. The safety level is marked on the functionally safe rotary encoder.

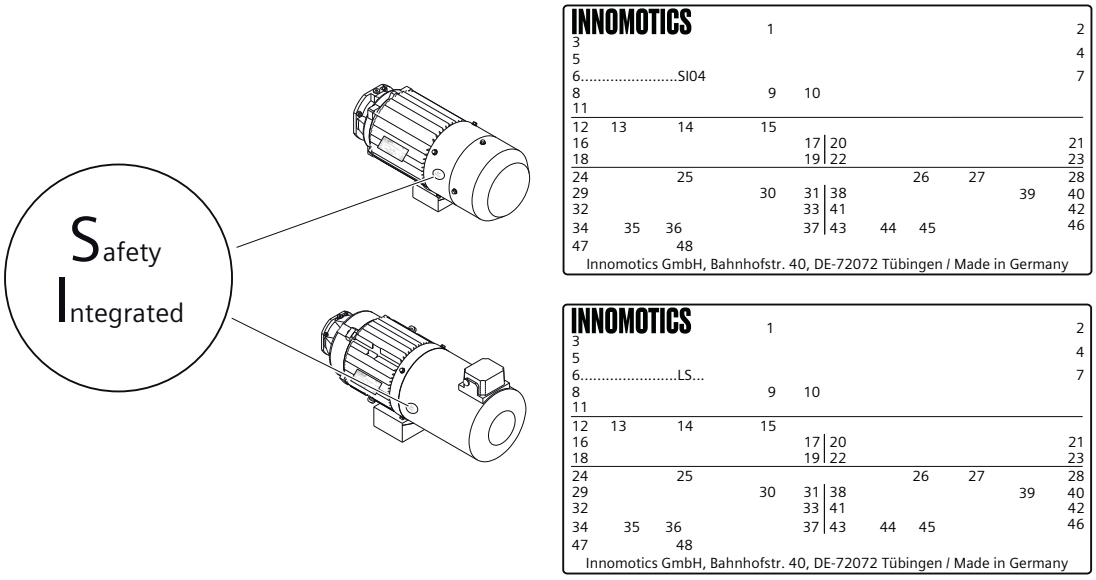

Figure 3-1 Marking for functional safety

3.5 Specific hazard types and fundamental obligations

⚠ WARNING
Hot, escaping oil Before starting any work wait until the oil has cooled down to below +30 °C.

⚠ WARNING
Poisonous vapors when working with solvents When working with solvents do not breath-in the associated vapors. Ensure good ventilation.

⚠ WARNING
Risk of explosion when working with solvents Ensure good ventilation. Do not smoke.

The company operating the unit must ensure that all persons assigned to work on the geared motor have read and understood these operating instructions and that they comply with them in all points in order to:

- Eliminate any risk to life and limb of users and third parties
- Ensure the operational safety of the geared motor.
- Avoid disruptions and environmental damage through incorrect use.

Comply with the following safety instructions:

In addition to the specified personal protection gear, also wear suitable protective gloves and safety glasses.

Comply with the instructions on the rating plates attached to the geared motor. The rating plates must be kept free from paint and dirt at all times. Replace any missing rating plates.

Collect and dispose of used oil in accordance with regulations. Immediately remove any spilt oil with an oil-binding agent.

Do not use high-pressure cleaning equipment or sharp-edged tools to clean the geared motor.

The machine OEM who installs the geared motors in a plant must include the regulations contained in these operating instructions in its own operating instructions.

During operation, comply with the vibration levels according to ISO 20816-1. Maximum permissible vibration values can be found in Installation notes (Page 29).

Technical description

4

4.1 General technical description

The gearbox is supplied with one, two or three transmission stages.

The gearbox is suitable for various mounting positions. Check the correct oil level.

Gearbox housing

The housings for sizes 19 and 29 are made of die-cast aluminum.

Depending on the gearbox type, the housings of sizes 39 and 49 are made of die-cast aluminum or cast iron.

The gearbox housing of worm geared motor S is manufactured out of die-cast aluminum.

Table 4-1 Housing material

Gearbox type	Size		
	39	39A	49
Helical gearbox E	Cast iron		Cast iron
Helical gearbox D/Z	Aluminum		Cast iron
Parallel shaft gearbox F	Cast iron		Cast iron
Bevel gearbox B	Aluminum		Aluminum
Bevel gearbox K	Cast iron		Cast iron
Helical worm gearbox C		Aluminum	Cast iron

From size 59, the gearbox housings are made of cast iron.

Geared components

The geared components are hardened and ground.

For the helical worm gearbox, the worm is hardened and ground. The gear is manufactured from high-quality bronze.

The bevel gear stage of the bevel gearbox is lapped in pairs.

The gear of the worm geared motor is manufactured out of high-quality bronze.

Lubrication

The intermeshing parts are supplied with lubricant by means of splash lubrication.

The worm geared motor is lubricated for life with high-quality synthetic oil.

Shaft bearings

All shafts are mounted in rolling bearings. The rolling bearings are lubricated using splash lubrication or oil-spray lubrication. Bearings that are not supplied with lubricant are closed and grease-lubricated.

4.2 Technical description of the XLplus and VLplus heavy-duty bearing systems

XLplus and VLplus heavy-duty bearing systems

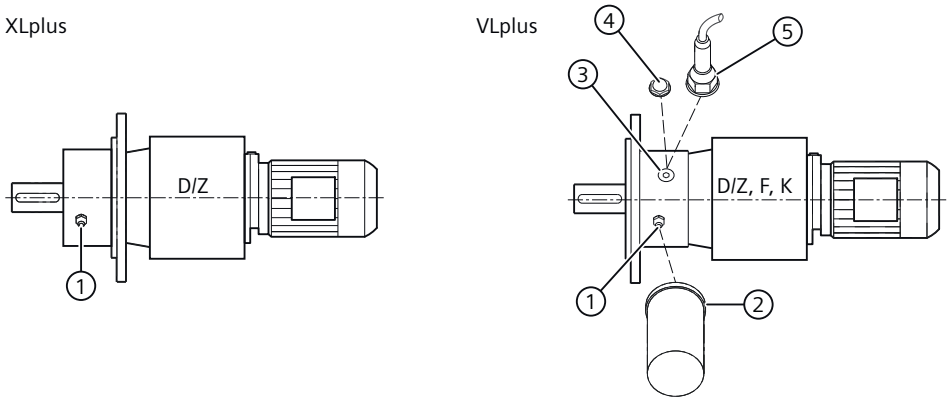

① Grease nipple
② Automatic regreasing device (optional)
③ Screw plug
④ Dry-well oil sight glass (optional)
⑤ Dry-well oil sensor (optional)

Figure 4-1 XLplus and VLplus heavy-duty bearing systems

The multi-stage helical gearbox sizes 89-169 can be supplied with an XLplus or VLplus heavy-duty bearing system.

The parallel-shaft gearbox and the helical gearbox sizes 89-169 can be supplied with a VLplus heavy-duty bearing system.

With an upstream locating bearing, the bearing system is suitable for high external forces. The absorbed radial and axial loads are transmitted to the machine via the flange.

The bearings are lubricated independently of the frame size. Initial greasing has already been carried out. The relubrication is made with the provided grease nipple.

Options for the VLplus heavy-duty bearing system:

An automatic regreasing device ② can be supplied as option. The automatic regreasing device ② can be installed at any position and can be used underwater.

A dry-well version with oil sight glass ④ or oil sensor ⑤ can be supplied as option. The dry-well version offers increased protection against oil leaks when the output shaft points down. The flange captures any escaping gear oil for leakages at the oil chamber. The escaping oil is signaled optically with an oil sight glass ④ or electronically by an oil sensor ⑤. If the oil sensor ⑤ is deployed in Ex-version gearboxes, the sensor must be operated with a disconnector approved for Ex.

4.3 Shaft seals

The shaft sealing rings on the output side prevent lubricant from escaping from the housing at the shaft outlet and prevent pollution from entering the housing.

The optimum use of the seals depends on the ambient conditions and the lubricant being used.

Radial shaft sealing ring

A high-quality radial shaft sealing ring is used as standard seal. The ring is provided with an additional dust lip to protect against contaminants from outside.

Permitted oil sump temperatures -40° C to +80° C.

Seal for a longer service life (optional)

The radial shaft sealing ring with dust lip has an additional buffer axial seal towards the inside of the gearbox. The sealing system has a high degree of reliability as a result of the insensitivity with respect to contaminations in the oil.

Permitted oil sump temperatures -40° C to +100° C.

Seal to handle increased environmental stress (optional)

This seal is equipped with an additional fiber disk. The disk so provides increased protection against higher environmental stress caused by dirt and dust.

Permitted oil sump temperatures -20° C to +80° C.

High temperature-resistant seal (optional)

The deployed radial shaft sealing rings are made of a temperature-resistant material.

Permitted oil sump temperatures -25° C to +110° C.

4.4 Cooling

NOTICE
Dust deposits prevent heat radiation Dust deposits prevent heat radiation and cause a high housing temperature. Keep the gearbox free from any dirt, dust, etc.

The gearbox does not require additional cooling. The generously dimensioned housing surface is sufficient for dissipating heat losses where there is free convection. If the housing temperature exceeds a value of +80 °C, please contact Technical Support.

4.5 Rating plate

The rating plate of the gearbox or geared motor is printed on a labeled polyester film or optionally on a stainless steel rating plate. The rating plate is glued using a special masking film. The film ensures permanent resistance to UV radiation and media of all kinds, such as oils, greases, salt water and cleaning agents.

The adhesive and material ensure firm adhesion and long-term readability throughout the operating temperature range of the gearbox and geared motor.

For painted drives, the edges of the rating plate have a paint finish to match the drive color.

4.6 Surface treatment

4.6.1 General information on surface treatment

All paint finishes are sprayed on.

Ex-version of gearbox and geared motor

The gearbox is delivered complete with primer and paint finish.

If the gearbox is delivered with primer only or unpainted, then a paint finish must be applied which conforms with the applicable guidelines for the specific application. The primer does not provide corrosion protection.

Worm geared motor S in Ex-version

As standard, the worm geared motor is not painted.

The worm geared motor is optionally delivered complete with primer and paint finish.

Ex-version of gearbox and geared motor

When applying conductive paint, the operating company must ensure that the paint remains in a perfect state.
The paint finish must be checked at intervals of 2 - 3 years.

Ex-version of gearbox and geared motor

An excessively high electrostatic charging must be avoided.
Ensure that highly active mechanisms that cause the paint finish to generate a charge are avoided.
Highly active mechanisms that can generate charges:

- Fast air with high dust content directed past the gearbox
- Sudden escape of compressed gases that contain particles
- Harsh abrasive procedures, this does not mean manual cleaning / wiping with cloths.

⚠ WARNING

Danger due to electrostatic discharge

For paint finishes in explosion group III, the paint can be electrostatically charged as a result of intensive dust turbulence or processes with high levels of electrostatic charging.

Risk of explosion as a result of processes with high levels of electrostatic charging

Minimize the risk of electrostatic charging by applying effective measures according to IEC 60079-32-1.

NOTICE
Failure of the external protection If the paint finish is damaged, the geared motor may corrode. Do not damage the paint finish.

Note

Information about the ability to be repainted does not guarantee the quality of the paint product supplied by your supplier.

Only the paint manufacturer is liable for the quality and compatibility.

Note

C1 paints are not suitable for ambient air temperatures below -20° C.

4.6.2 Painted version

The corrosion protection system is classified according to the corrosiveness categories in DIN EN ISO 12944-2.

Paint according to corrosiveness categories

Paint system	Description
Corrosiveness category C1, unpainted for gearbox and motor housings made of aluminum	
-	• Indoor installation • Heated buildings with neutral atmospheres • Resistance to greases and some resistance to mineral oils, aliphatic solvents • Standard

Paint system	Description
Corrosiveness category C1 for normal environmental stress	
1-component hydro paint, top coat	• Indoor installation • Heated buildings with neutral atmospheres • Resistance to greases and some resistance to mineral oils, aliphatic solvents • Standard paint for gearbox housings made of cast iron

Paint system	Description
Corrosiveness category C2 for low environmental stress	
2-component - polyurethane top coat	• Indoor and outdoor installation • Unheated buildings with condensation, production areas with low humidity, e.g. warehouses and sports facilities • Atmospheres with low levels of pollution, frequently rural areas • Resistance to greases, mineral oils and sulfuric acid (10 %), caustic soda (10 %) and is conditionally resistant to aliphatic solvents

Paint system	Description
Corrosiveness category C3 for medium environmental stress	
2-component epoxy zinc phosphate base coat, 2-component polyurethane top coat	• Indoor and outdoor installation • Production areas with high humidity and some air contamination, e.g. food production areas, dairies, breweries and laundries • Urban and industrial atmospheres, moderate contamination from sulfur dioxide, coastal areas with low salt levels • Resistance to greases, mineral oils, aliphatic solvents, sulfuric acid (10 %), caustic soda (10 %)

Paint system	Description
Corrosiveness category C4 for high environmental stress	
2-component epoxy zinc phosphate base coat, 2-component polyurethane top coat	• Indoor and outdoor installation • Chemical plants, swimming pools, wastewater treatment plants, electroplating shops, and boathouses above seawater • Industrial areas and coastal areas with moderate salt levels • Resistance to greases, mineral oils, aliphatic solvents, sulfuric acid (10 %), caustic soda (10 %)

Paint system	Description
Corrosiveness category C5 for very high environmental stress	
2-component epoxy zinc phosphate base coat, 2-component polyurethane intermediate coat, 2-component polyurethane top coat	• Indoor and outdoor installation • Buildings and areas with almost constant condensation and high levels are contamination, e.g. malt factories and aseptic areas • Industrial areas with high humidity and aggressive atmosphere, coastal areas and offshore environments with high salt levels • Resistance to greases, mineral oils, aliphatic solvents, sulfuric acid (10 %), caustic soda (20 %)

In case of corrosiveness category C1, overpainting with a 1-component hydrosystem after prior rubbing down is possible.

In case of corrosiveness categories C2 to C5, overpainting with 2-component polyurethane paint, 2-component epoxide paint and 2-component acrylic paint after prior rubbing down is possible.

4.6.3 Primed version

Primer according to corrosiveness category

Paint system	Can be overpainted with
Unpainted corrosiveness category C1	
Cast iron parts immersion primed, steel parts primed or zinc-plated, aluminum and plastic parts untreated	• Synthetic paint, synthetic resin paint, oil paint • 2-component polyurethane paint • 2-component epoxy paint

Paint system	Can be overpainted with
Primer according to corrosiveness category C2 G	
2-component epoxy zinc phosphate, specified coat thickness 60 µm	• 2-component - polyurethane paint • 2-component - epoxy paint • 2-component - acrylic paint • Acid-hardening paint

Paint system	Can be overpainted with
Primer according to corrosiveness category C4 G	
2-component epoxy zinc phosphate, desired coat thickness 90 µm	• 2-component - polyurethane paint • 2-component - epoxy paint • 2-component - acrylic paint • Acid-hardening paint

4.7 Ex ignition hazards in accordance with EN 80079-37

Ex-version gearboxes

Ex marking
Regardless of the type of protection, the letter »h« is always assigned. In addition to the marking on the rating plate, the valid types of protection below are applied:

Constructional safety "c"
Constructional safety is ensured by selecting suitable materials and components, dimensioning the product for the customer's application, suitable sealing systems, adequate lubrication of rolling bearings, geared components and seals and by conducting thermal testing.

Liquid immersion "k"
The liquid immersion is achieved through oil bath lubrication. Refer to the type plate and the operating instructions for the original oil filling.

Monitoring ignition sources "b"
Monitoring ignition sources is achieved by monitoring the temperature and/or electrically monitoring the oil level.

Ex-version of gearbox and geared motor

Service and maintenance work that are relevant for the type of protection shall only be carried out by Innomotics service personnel or by Innomotics authorized partners.

Goods received, transport and storage 5

5.1 Incoming goods

NOTICE
Transport damage Do not install or commission damaged products.

Note

If you do not install the product immediately, do not remove or damage any of the packaging because this serves as preservation and/or corrosion protection

Note

Check that the technical specifications are in accordance with the purchase order.

Inspect the delivery immediately on arrival for completeness and any transport damage.

When you receive the goods, immediately check them for any transport damage. Immediately report any transport damage that is identified to the transport company.

The gearbox or geared motor is delivered in a fully assembled condition. Additional items are shipped in separate packaging if applicable.

The products supplied are listed in the dispatch papers.

5.2 Transport

5.2.1 General information on transport

NOTICE
The use of force will damage the gearbox or geared motor Transport the gearbox or geared motor carefully. Avoid impacts. Only remove existing transport locks before commissioning. Store the transport locks or disable them. Reuse the transport locks for further transports or enable them again.

Different forms of packaging may be used, depending on the size of the gearbox or geared motor and the method of transport. Unless contractually agreed otherwise, the seaworthy packaging complies with HPE Packaging Guidelines (Bundesverband Holzpackmittel Paletten

Exportverpackungen e.V., the German Federal Association for wooden packaging, pallets, and export packaging).

Comply with the graphic symbols provided on the packaging. These have the following meanings:

This way up

Center of gravity

Fragile

Do not use hand hook

Keep dry

Attach here

Keep cool

5.2.2 Fastening for suspended transport

⚠ WARNING

Inadequately fastened gearboxes or geared motors can break loose

Use only the transport eye or lifting eyebolt of the gearbox to transport the gearbox or geared motor. The eye and the bolt are designed only for the weight of the gearbox or geared motor. It is not permissible to add additional loads to the eye and bolt.

Do not use lifting eyebolts screwed into the front threads at the shaft ends for transport.

Existing eyebolts and cast-on lifting eyes on the motor housing are not designed to support the entire unit. If you lift the unit only by the eyebolts or lifting eyes on the motor housing, the eyebolts may be ripped out of the threads or the lifting eyes may break off and cause serious or fatal injury. Use lifting eyebolts or lifting eyes on the motor housing only to stabilize the position.

Observe the maximum specified load on the eyebolt. Stress applied transversely to the ring plane is not permissible. Do not use bent or damaged eyebolts.

Use additional, suitable load suspension equipment when transporting or installing.

When attaching using several chains and ropes, 2 cable/chain strands must be sufficient to carry the complete load. Secure the load suspension equipment so that it cannot slip.

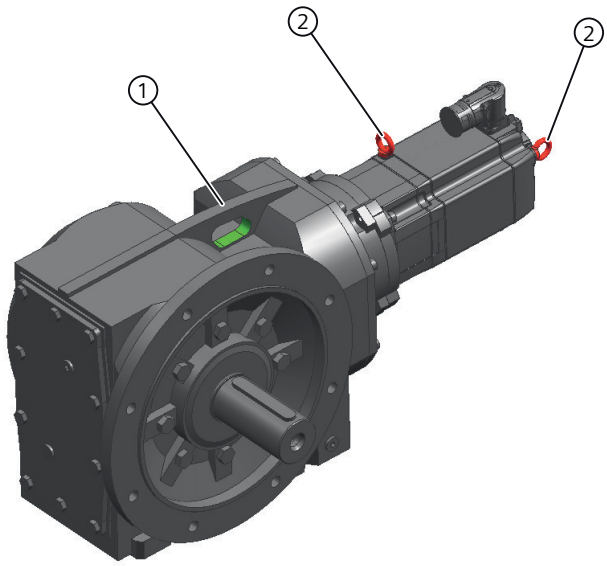

① Transport eye gearbox
Support for the geared motor unit.

② ATTENTION!
Lifting eyebolt on the motor housing
Sole support of the entire geared motor unit not permitted!
Only suitable to stabilize the position.

Figure 5-1 Use of transport eye and eyebolt

Table 5-1 Maximum load of the eyebolt on the gearbox

Thread size	m	d_3	Thread size	m	d_3
	kg	mm		kg	mm
M8	140	36	M20	1200	72
M10	230	45	M24	1800	90
M12	340	54	M30	3 200	108
M16	700	63	-	-	-

The eyebolt corresponds to DIN 580.

Procedure

1. Transport the gearbox or geared motor by the lifting eyes or eyebolts on the gearbox housing.
2. The lifting eyes and eyebolts are designed only for the weight of the gearbox or geared motor. It is not permissible to add additional loads such as built-on parts on the gearbox to the lifting eyes and lifting eyebolts.
3. Remove any eyebolts that are no longer required after transport.

You have prepared the gearbox or geared motor for transport.

5.3 Storage

5.3.1 General information for storage

⚠ WARNING
Danger of serious injuries caused by falling objects **Danger of damage to the gearbox when stacked** Do not stack gearboxes or geared motors on top of one another.

NOTICE
Failure of the external protection Mechanical damage, chemical damage and thermal damage, such as scratches, acids, alkalis, sparks, welding beads and heat cause corrosion. Do not damage the paint finish.

Unless contractually agreed otherwise, the guarantee period for the standard preservative lasts 6 months from the date of delivery.

In the case of storage in transit over 6 months, special arrangements must be made for preservation. Contact Technical Support.

Store the gearbox or geared motor in dry, dust-free rooms that are maintained at a constant temperature.

The storage location must be vibration- and shock-free.

The free shaft ends, sealing elements and flange surfaces must have a protective coating.

Do not store the geared motor on the fan cover.

5.3.2 Storage up to 36 months with long-term preservation (optional)

5.3.2.1 General notes for storage up to 36 months

Store the gearbox or geared motor in dry, dust-free rooms that are maintained at a constant temperature. Special packing is then not necessary.

If rooms such as these are not available, pack the gearbox or the geared motor in plastic film or air-tight sealed film and materials. The films and materials must be able to accept moisture. Provide protective cover against heat, direct sunlight and rain.

The permissible ambient temperature is -25 °C to +50 °C.

The life of the corrosion protection is 36 months from delivery.

5.3.2.2 Gearbox filled with operating oil and anti-corrosive agent

NOTICE
Damage to the gearbox caused by incorrect oil quantities
Check the oil level before commissioning.
Comply with the information and procedures for Checking the oil level (Page 94).

The gearbox is filled with oil corresponding to the mounting position so that it is ready for operation, and is sealed airtight using a screw plug or with a pressure breather valve with transport fixture.

For storage up to 36 months, a VCI anti-corrosion agent (**V**olatile **C**orrosion **I**nhibitor) is added.

5.3.2.3 Gearbox completely filled with oil

NOTICE
Damage to the gearbox caused by incorrect oil quantities
Prior to commissioning, remove any excess oil until it has the correct oil level.
Observe the information and procedures for Correcting the oil level (Page 94).

When biodegradable oils or oils for the food-processing sector are used, the gearbox is filled completely with operating oil. The gearbox is closed air-tight with a sealing plug or a pressure venting with transport fixture.

Do not lower the oil level during short-time commissioning for 10 minutes in no-load operation.

Mounting 6

6.1 Unpacking

Remove and dispose of the packaging material and transport equipment in compliance with regulations.

6.2 General information on installation

Ex-version of gearbox and geared motor

Effect on bearings of stray electric currents from electrical equipment.

When mounting the gearbox on or connecting it to the machine, take care to ensure potential equalization. Comply with the notes on grounding and equipotential bonding provided by the motor supplier.

WARNING

Operating under load

Under load, the system can start or reverse in an uncontrolled fashion.

The entire system must be load-free so that there is no danger during this work.

NOTICE

Destruction caused by welding

Welding destroys the geared components and the bearings.

Do not weld on the gearbox or the geared motor. Do not use the gearbox or the geared motor as a grounding point when carrying out welding work.

NOTICE

Overheating caused by solar radiation

Overheating of the gearbox or the geared motor due to exposure to direct sunlight.

Provide suitable protection equipment such as covers or roofs. Avoid the accumulation of heat (hot spots).

NOTICE

Malfunction resulting from foreign objects

The company operating the unit must ensure that no foreign objects impair the function of the gearbox or the geared motor.

NOTICE
Damaged components impair the correct functioning If any components are damaged, the correct function of the gearbox or geared motor is no longer guaranteed. Do not install any damaged gearbox components.

NOTICE
Violation of the maximum permissible oil sump temperature The oil sump temperature will be exceeded if the temperature monitoring equipment is incorrectly set. An alarm must be output when the maximum permissible oil sump temperature is reached. The geared motor must be switched off when the maximum permissible temperature is exceeded. The machine will come to a standstill if the geared motor is shut down.

Take special care when mounting. The manufacturer cannot be held liable for damage caused by incorrect mounting and installation.

Ensure that there is space around the gearbox or geared motor for carrying out mounting work, cleaning and maintenance work.

For geared motors with a fan, leave a lot of free space for the air intake. Observe the installation conditions for the geared motor.

Provide a lot of hoisting gear when starting mounting work.

Observe the mounting position specified on the rating plate. This ensures that the correct quantity of lubricant is provided.

Use all the fastening means that have been assigned to the particular mounting position and mounting type.

Cap bolts cannot be used in some cases due to a lack of space. In such cases, please contact Technical Support quoting the type of gearbox.

For inclined mounting positions or extreme environmental effects, protect the drive by applying additional measures (e.g. a laterally mounted weather protection canopy).

6.3 Thread sizes and tightening torques for fixing screws

The general tolerance for the tightening torque is 10 %. The tightening torque is based on a friction coefficient of μ = 0.14.

Table 6-1 Tightening torques for fixing screws

Thread size	Tightening torque for property class		
	8.8	**10.9**	**12.9**
	Nm	**Nm**	**Nm**
M4	3	4	5
M5	6	9	10

Thread size	Tightening torque for property class		
	8.8	**10.9**	**12.9**
	Nm	**Nm**	**Nm**
M6	10	15	18
M8	25	35	41
M10	50	70	85
M12	90	120	145
M16	210	295	355
M20	450	580	690
M24	750	1 000	1 200
M30	1 500	2 000	2 400
M36	2 500	3 600	4 200

6.4 Gearbox with foot mounting

Design and construct the foundation in such a way that no resonance vibration occurs and no vibration is transmitted from adjacent foundations.

The foundation structure on which the gearbox is to be mounted must be torsionally rigid. Design and construct the foundation taking into account the weight and torque of the forces acting on the gearbox. If the substructure is too weak, it will cause radial or axial displacement offset during operation that cannot be measured at a standstill.

If the gearbox is fastened to a concrete foundation, use foundation blocks for the appropriate recesses.

Align and grout the slide rails into the foundation.

Align the gearbox carefully with the units on the input and output side. Take into account the elastic deformation due to operating forces.

Prevent displacement from external forces due to lateral impacts.

Use stud bolts or headless screws of strength class 8.8 or higher for the mounting foot. Comply with the tightening torque.

Table 6-2 Thread size of the fastening bolt

Thread size	Helical gearbox		Parallel shaft gearbox F	Bevel gearbox B, K	Helical worm gearbox C	Worm geared motor S
	E	**D/Z**				
	Size					
M8	-	19, 29, 39	29, 39	B19, B29, B39	29	09, 19, 29
M10	39	-	49	B49, K39, K49	39A, 39, 49	-
M12	49	49, 59, 69	69, 79	K69, K79	69	-
M16	69, 89	79, 89	89, 109	K89	89	-
M20	109, 129	109	129	K109	-	-
M24	-	129	149	K129	-	-

Thread size	Helical gearbox		Parallel shaft gearbox F	Bevel gearbox B, K	Helical worm gearbox C	Worm geared motor S
	E	D/Z				
	Size					
M30	149	149	169	K149	-	-
M36	-	169, 189	189	K169, K189	-	-

6.5 Gearbox with flange fastening

Note

Innomotics recommends an anaerobic adhesive to increase the friction locking between flange and mounting surface.

Table 6-3 Thread size of the fastening bolt

Thread size	Flange	Helical gearbox E, D/Z	Parallel shaft gearbox F	Bevel gearbox B, K	Helical worm gearbox C
		Size			
M6	A120	19, 29, 39	29	B19, B29	29
M8	A140, A160	19, 29, 39, 49, 59	29, 39	B29, B39, K39	29, 39
M10	A200	39, 49, 59, 69	49	B39, B49, K49	49, 69
M12	A250, A300	49, 59, 69, 79, 89, 109	69, 79, 89	K69, K79, K89	89
M16	A350	79, 89, 109, 129, 149	109	K109	-
M16	A450	89, 109, 129, 149, 169	129, 149	K129, K149	-
M16	A550	129, 149, 169, 189	169	K169	-
M20	A660	169, 189	189	K189	-

Use screws / nuts of strength class 8.8 for gearboxes with a flange-mounted design.

Comply with the following exceptions:

Table 6-4 Property class of the fixing screw for FF/FAF, BF/BAF, KF/KAF and CF/CAF

Gearbox size	Flange	Strength class for motor size													
		63	71	80	90	100	112	132	160	180	200	225	250	280	315
39	A160	8.8	10.9	10.9	10.9	10.9	-	-	-	-	-	-	-	-	-
49	A200	8.8	8.8	8.8	8.8	10.9	10.9	10.9	-	-	-	-	-	-	-
69	A250	8.8	8.8	8.8	8.8	8.8	8.8	10.9	-	-	-	-	-	-	-
79	A250	8.8	8.8	8.8	8.8	8.8	8.8	10.9	10.9	-	-	-	-	-	-
89	A300	-	8.8	8.8	8.8	10.9	10.9	10.9	10.9	10.9	-	-	-	-	-
109	A350	-	-	8.8	8.8	8.8	8.8	10.9	10.9	10.9	10.9	10.9	-	-	-
129	A450	-	-	-	8.8	8.8	8.8	8.8	8.8	8.8	8.8	8.8	-	-	-
149	A450	-	-	-	-	8.8	8.8	8.8	8.8	8.8	10.9	10.9	10.9	-	-

Gearbox size	Flange	Strength class for motor size													
		63	71	80	90	100	112	132	160	180	200	225	250	280	315
169	A550	-	-	-	-	-	8.8	8.8	10.9	10.9	10.9	10.9	10.9	10.9	-
189	A660	-	-	-	-	-	8.8	8.8	8.8	8.8	8.8	8.8	10.9	10.9	10.9

Table 6-5 Strength class of the fastening bolt / nut for EZ, EF, DZ/ZZ and DF/ZF

Gearbox size		Flange	Strength class
E	D/Z		
39	29, 39	A120	10.9 [1)]
-	49	A140	10.9
49	59	A160	
69	69	A200	
89	79	A250	
109	89	A300	
129, 149	109, 129	A350	
-	149, 169	A450	
-	189	A550	
1) Use suitable washers under the nuts / bolt heads			

6.6 Gearboxes in foot or flange version

NOTICE

Impermissible housing loadings caused by incorrectly installed add-on elements

Do not subject the gearbox housing to excessive stress by adding add-on elements to the foot or flange.

Add-on elements must not transmit forces, torques, and vibrations to the gearbox.

To prevent strains on the housing, fasten the gearbox only on the flange or the foot fastening for force and torque transmission. Refer to Gearbox with foot mounting (Page 49).

The second mounting option (foot or flange) is intended for add-on elements, e.g. protection covers with an intrinsic weight of up to max. 30 % of the weight of the gearbox.

6.7 Gearbox with C-type housing flange

The gearbox with C-type housing flange is delivered ready for mounting on machines. It is mounted using an inner centering. Depending on the version, the sealing rings are pressed in deeper at the DE and/or NDE so that simple mounting is ensured.

Note

If the inserted sealing ring is located on the top of the gearbox, neither water nor dirt can collect. We recommend the use of a protection cover (optional).

6.8 Mounting an input or output element on the gearbox shaft

⚠ WARNING

Risk of burns caused by hot parts

Do not touch the gearbox without protection.

NOTICE

Damage to shaft sealing rings caused by solvent

Avoid that solvent or benzine comes into contact with the shaft sealing rings.

NOTICE

Damage to shaft sealing rings caused by heating

When heating up to over 100 °C, protect the shaft sealing rings from radiant heat using appropriate thermal protection shields.

NOTICE

Premature wear or material damage due to misalignment

Avoid misalignment errors as a result of excessively high angular or axial misalignment of the shaft ends to be connected.

Ensure that the individual components are precisely aligned.

NOTICE

Damage caused by improper handling

Do not to damage bearings, housing, shaft and locking rings as a result of improper handling.

Do not use impact or knocks to mount input and output elements onto the shaft.

Note

Deburr elements to be fitted in the area of the bore or keyways.

Recommendation: 0.2 x 45°

Where couplings are to be fitted in a heated condition, observe the specific operating instructions for the coupling. Unless otherwise specified, apply the heat inductively using a torch or in a furnace.

Use the center holes in the shaft end faces.

Use a fitting device to fit the input or output elements.

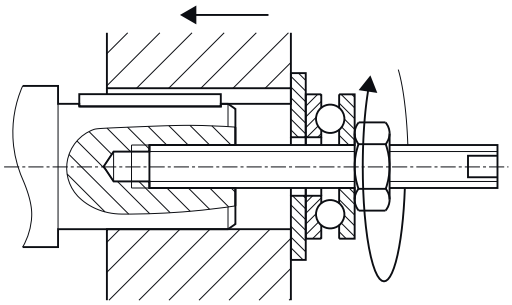

Figure 6-1 Example of a fitting device

Observe the correct mounting arrangement to minimize stress on shafts and bearings due to lateral forces.

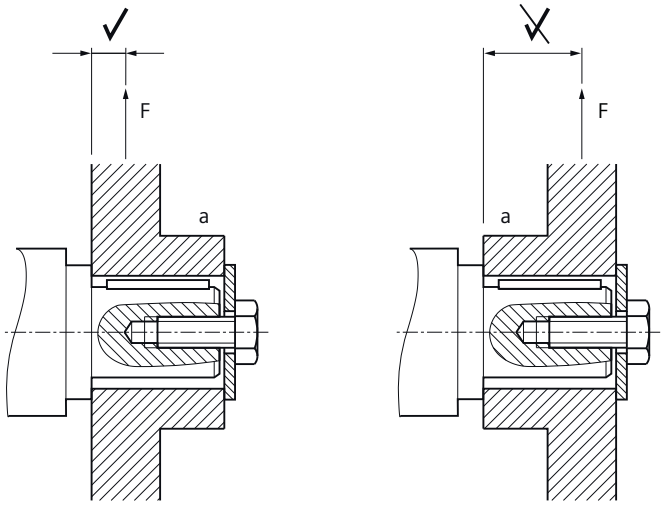

✓ Right

✗ Wrong

a Hub

F Force

Figure 6-2 Mounting arrangement for low stress on shafts and bearings

Procedure

1. Use benzine or a solvent to remove the anti-corrosion protection from the shaft ends and flanges. Or alternatively remove the existing protective skin.
2. Pull the drive input and output elements onto the shafts. Lock the elements.

You have now attached the input or output element.

6.9 Removing and installing the protection cover

Ex-version gearboxes

A damaged protection cover causes sparks. Replace damaged protection covers immediately.

Secure bolts ① with, e.g. Loctite 243 medium-strength adhesive.

The plastic cover is not Ex-compliant.

The protection cover of the hollow shaft is delivered ready-fitted to the gearbox flange. Dismantle the protection cover for installation of the output shaft.

The plastic protection cover of the hollow shaft is supplied loose as kit.

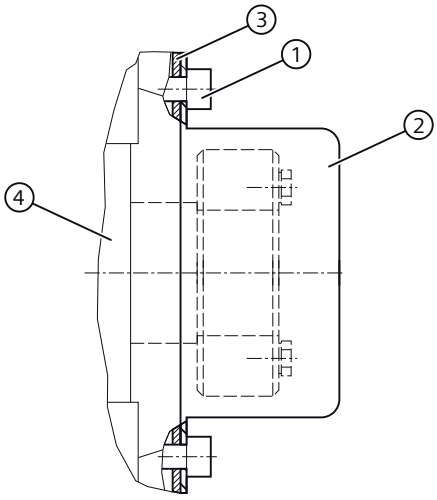

Figure 6-3 Protection cover for hollow shaft

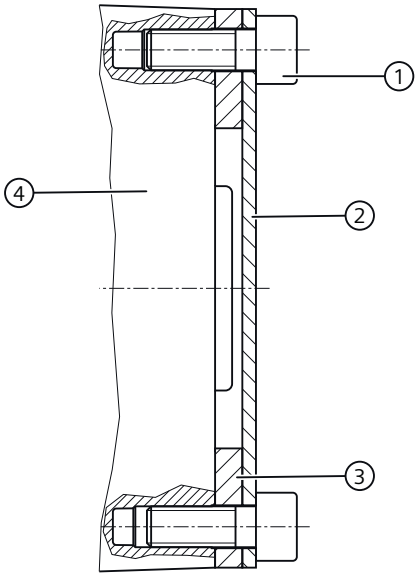

Figure 6-4 Protective cover for hollow shaft for worm geared motor S

① Screw
② Protection cover
③ Flat gasket/O-ring
④ Gearbox housing

Procedure

Premounted protection cover

1. Loosen the screws ① and remove the protection cover ② together with the flat gasket or O-ring ③.
2. Mount the output shaft.
3. Use a suitable cleaning agent to clean the contact surface of the protection cover ② on the gearbox.
4. Ensure that the flat seal or the O-ring ③ is correctly seated.
5. Apply medium-strength adhesive, e.g. Loctite 243 to the screws ①.
6. Screw on the protection cover ②.
7. Protect all remaining bare areas with a suitable permanent anti-corrosive agent.

You have now installed the protection cover for operation.

Protection cover (supplied loose)

When using the plastic protection cover for gearbox F49, break the cover into the correct shape first.

When using the plastic protection cover for other gearboxes, it is not necessary to bring the cover into the required shape; in this case, start with Point 2.

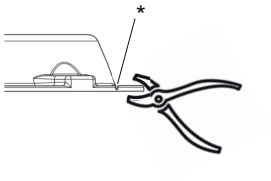

* Preset breaking point

Figure 6-5 Preset breaking point for F49

1. F49: Break the cover at the preset breaking point, see diagram.
2. Mount the output shaft.
3. Use a suitable cleaning agent to clean the contact surface of the protection cover ② on the gearbox.
4. Ensure that the O-ring or flat seal ③ is correctly seated.
5. Screw on the protective cover ② with a tightening torque of 5-10 Nm.
6. Protect all remaining bare areas with a suitable permanent anti-corrosive agent.

You have now mounted the plastic protection cover for operation.

6.10 Mounting and removing the slip-on gearbox

6.10.1 General information on installing the shaft-mounted gearbox

NOTICE
Damage to shaft sealing rings caused by solvent Avoid solvent or washing benzine coming into contact with the shaft sealing rings.

NOTICE
Subjecting stress to the hollow shaft causes bearing failure If you skew or stress the hollow shaft, then this increases the load on it. This causes the bearings to fail. The hollow shaft must be flush with the machine shaft to avoid misalignment. Do not subject the hollow shaft to axial and radial loads.

NOTICE
For shrink disks: **Lubricants in the area between the hollow shaft and machine shaft impair torque transmission** Keep the bore in the hollow shaft and the machine shaft completely free of any grease. Do not use impure solvents and dirty cleaning cloths.

Note

Coat the mounting paste supplied with the product or any suitable lubricant on the contact surfaces to prevent frictional corrosion.

Note

Observe the permissible radial eccentricity tolerance of the cylindrical shaft end of the machine shaft to the housing axle according to DIN 42955.

6.10.2 Hollow shaft with feather key

6.10.2.1 Mounting the hollow shaft with parallel key

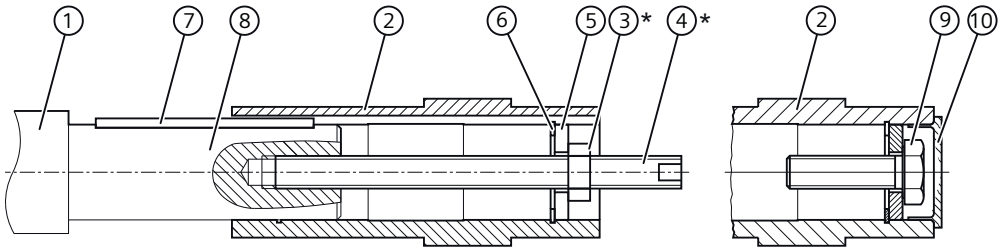

* Not included in scope of supply

1	Machine shaft	6	Locking ring
2	Hollow shaft	7	Parallel key
3	Hexagon nut	8	Mounting paste
4	Threaded spindle	9	Screw
5	Disk	10	Sealing cap

Figure 6-6 Mounting the hollow shaft with parallel key

Instead of the nut and threaded spindle shown in the diagram, other types of equipment such as hydraulic lifting equipment may be used.

Procedure

1. Using benzine or a solvent, remove the anti-corrosion protection from the shaft ends and flanges.
2. Check the seats or edges of the hollow and machine shafts for any damage. Contact Technical Support if you notice any damage.
3. Apply the mounting paste provided ① to the machine shaft ⑧. Apply the paste uniformly. Carefully wipe away the rest at the shaft sealing ring of the gearbox.
4. Fit the gearbox using the disk ⑤, threaded spindle ④ and nut ③. Use the hollow shaft ② for support.
5. Replace the nut ③ and the threaded spindle ④ with a screw ⑨. Tighten the bolts ⑨ to the specified torque.
6. Close the open hollow shaft end using a sealing cap ⑩.

You have now mounted the hollow shaft with parallel key.

Table 6-6 Tightening torque for the screw

Thread size	M5	M6	M8	M10	M12	M16	M20	M24	M30
Tightening torque in Nm	5	8	8	14	24	60	120	200	400

6.10.2.2 Removing the hollow shaft with parallel key

⚠ WARNING

Inadequately fastened gearboxes or geared motors can break loose

Before driving out the machine shaft, fasten an adequately dimensioned load suspension device to the gearbox.

Slightly pretension the pulling equipment so that the gearbox does not drop onto it when the insert shaft is released.

NOTICE

Subjecting stress to the hollow shaft causes bearing failure

Do not skew when withdrawing.

NOTICE

Excessive forces during removal

Excessive forces can occur when removing the hollow shaft via the housing.

Stresses in the hollow shaft can lead to bearing failure and damage to the gearbox housing.

Note

If frictional corrosion has occurred on the seat surfaces, use rust solvent to facilitate the removal of the gearbox. Allow the rust solvent to take effect.

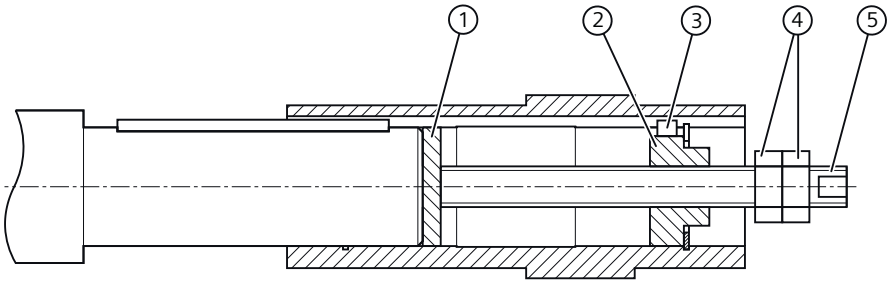

Items ① to ⑤ are not included in the scope of supply.

① Disk
② Threaded block
③ Feather key
④ Hexagon nut
⑤ Leadscrew

Figure 6-7 Removing the hollow shaft with parallel key

Procedure

1. Remove the axial locking element from the hollow shaft.
2. Drive out the machine shaft using the disk ①, threaded block ②, feather key ③, threaded spindle ⑤ and hexagon nuts ④.

You have now removed the hollow shaft with fitted key.

Design suggestion for threaded block and disk

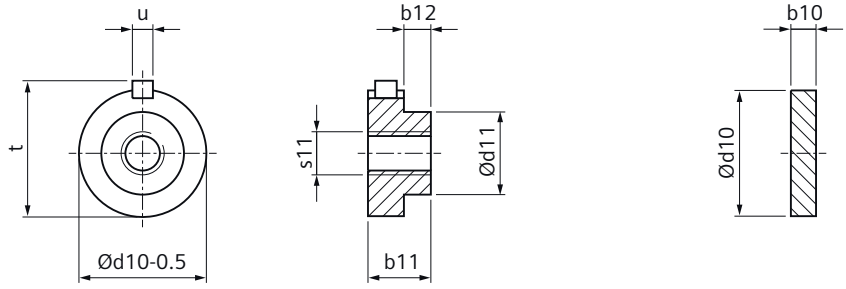

Gearbox	Frame size	Hollow shaft Ø	b10	b11	b12	d10	d11	s11	t_{max}	u
		mm	mm	mm	mm	mm	mm	mm	mm	mm
S	09		3	5	-	15.9	-	M6	8	5
B	19	20	3	15	10	19.9	10	M6	22.5	6
S	19		3	6	-	17.9	-	M6	20.5	6
B, C, S	29	20	3	15	10	19.9	10	M6	22.5	6
S	29		3	15	10	24.9	14	M8	28	8
B, F	29	25	3	15	10	24.9	16	M10	28	8

Gearbox	Frame size	Hollow shaft Ø	b10	b11	b12	d10	d11	s11	t_{max}	u
		mm	mm	mm	mm	mm	mm	mm	mm	mm
C	39	25	3	15	10	24.9	16	M10	28	8
B, K, F, C		30	6	15	10	29.9	18	M10	33	8
B		35	6	15	10	34.9	24	M12	38	10
B		40	6	15	10	39.9	28	M16	43	12
C	49	30	6	15	10	29.9	18	M10	33	8
K, F, C		35	6	15	10	34.9	24	M12	38	10
B		40	6	15	10	39.9	28	M16	43	12
K, F, C	69	40	6	20	9	39.9	28	M16	43	12
C		45	6	20	9	44.9	36	M16	48	14
K, F	79	40	6	20	9	39.9	28	M16	43	12
K, F, C	89	50	7	20	10	49.9	36	M16	53.5	14
C		60	7	20	10	59.9	45	M20	64	18
K, F	109	60	10	24	14	59.9	45	M20	64	18
K, F	129	70	10	24	14	69.9	54	M20	74.5	20
K, F	149	90	10	24	14	89.9	72	M20	95	25
K, F	169	100	10	30	15	99.9	80	M24	106	28
K, F	189	120	10	30	15	109.9	80	M24	127	32

6.10.3 Hollow shaft with shrink disk

6.10.3.1 Mounting the hollow shaft with shrink disk

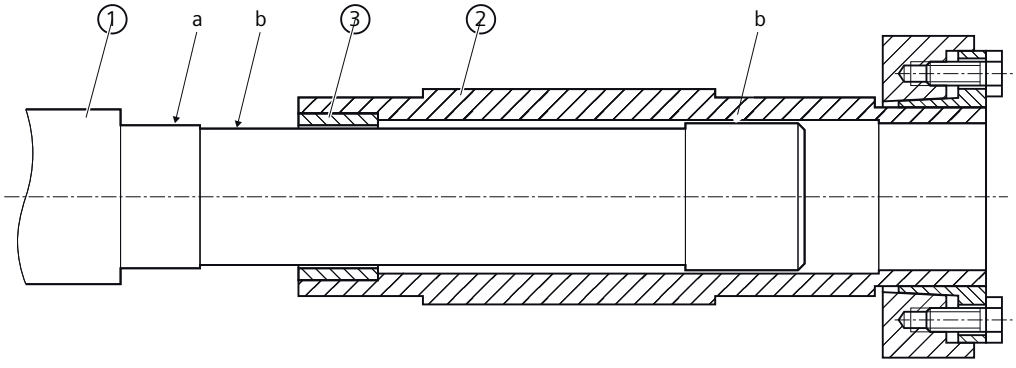

a Greased

b Absolutely grease-free

① Machine shaft

② Hollow shaft

③ Bushing

Figure 6-8 Mounting the hollow shaft with shrink disk

Procedure

1. Using benzine or a solvent, remove the anti-corrosion protection from the shaft ends and flanges.
2. Check the seats or edges of the hollow and machine shafts for any damage. Contact Technical Support if you notice any damage.
3. Mount the gearbox with the shrink disk shaft onto the machine shaft. Carefully ensure the correct position and that the shrink disk seat completely covers the machine shaft.

You have mounted the hollow shaft with shrink disk.

6.10.3.2 Mounting the shrink disk

⚠ WARNING

Risk of injury due to freely rotating parts

Attach the cover cap or protective cover.

NOTICE

Lubricants in the shrink disk seat impair torque transmission

Keep the bore in the hollow shaft and the machine shaft completely free of any grease.

Do not use impure solvents and dirty cleaning cloths.

NOTICE

Plastic deformation of the hollow shaft caused by tightening the tightening bolts

Plastic deformation of the hollow shaft when tightening the tightening bolts before fitting the machine shaft.

Install the machine shaft first. Tighten the clamping screws.

NOTICE

Avoid overloading the individual bolts

Do not exceed the maximum tightening torque for the clamping screw.

Sizes 19 - 69:
Tighten clamping screws ⑥.

Frame sizes 79 - 189:
it is important that the face surfaces of the outer ring ④ and the inner ring ⑤ are flush with one another.
If they are not flush with one another when fitting, then check the tolerance of the plug-in shaft.

Note

The shrink disk, item ③, is delivered ready for installation.

Do not disassemble it before the 1st fitting.

Note

The machine shaft material must comply with the following criteria in order to safely and reliably transfer the forces and torque:

- Yield point Re ≥ 360 N/mm^2
- Modulus of elasticity: approx. 206 kN/mm^2
- No face end thread in the machine shaft because it would reduce the transferred torque

Note

The shrink-fitted disc connection fastens the hollow shaft axially on the machine shaft.

Note

Apply a thin layer of grease to the shrink disk seat on the hollow shaft.

Note

Apply a coating of a suitable lubricant on the customer's machine shaft in the vicinity of the bushing to prevent frictional corrosion of the contact surface.

Sizes 19 - 69

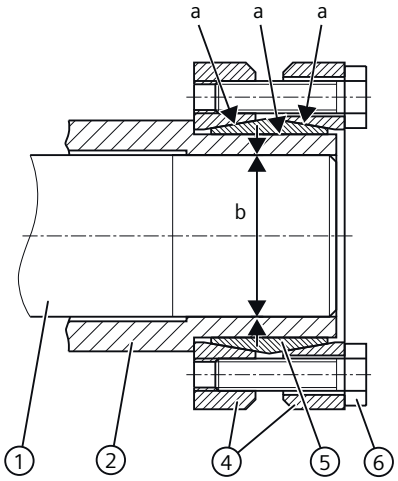

Sizes 79 - 189

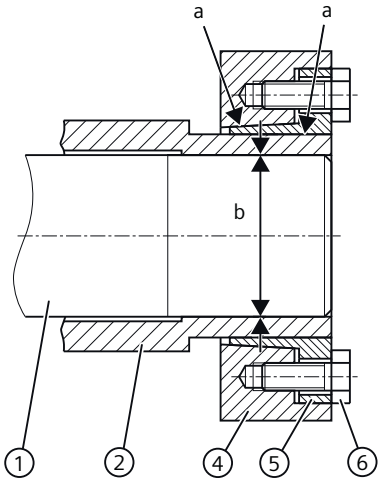

a	Greased
b	Absolutely grease-free
①	Machine shaft
②	Hollow shaft

③ Shrink disk comprising items ④ - ⑥
④ Outer ring
⑤ Inner ring
⑥ Tightening bolt

Procedure

1. Push the shrink disk ③ onto the hollow shaft ②.
   – 3-part shrink disk up to the end stop for frame sizes 19 - 69.
   – 2-part shrink disk flush with the shaft end for frame sizes 79 - 189.
2. Tighten the clamping bolts ⑥, initially by hand. Align the shrink disk ③ so that the clamping flanges are plane-parallel with one other.
3. Use the torque wrench to tighten each of the clamping screws ⑥ (not crosswise), repeating this procedure several times. Evenly tighten the clamping screws through 1/6 of a revolution. Comply with the tightening torque.
4. Attach the rubber cover or protection cover included in the scope of delivery, as in Chapter Removing and installing the protection cover (Page 54).

You have now installed the shrink disk.

Table 6-7 Tightening torques for clamping screws

Gearbox size	Thread size	Strength class	Tightening torque
			Nm
19, 29	M5	10.9	5
39, 49, 69	M6	10.9	12
79, 89	M8	12.9	35
109	M10	12.9	70
129	M10	12.9	70
149	M12	12.9	121
169, 189	M14	12.9	193

6.10.3.3 Pulling off the shrink disk

Procedure

1. Successively release the tightening bolts ⑥ one after the other through a ¼ turn each time using a wrench. Do not completely remove the bolts.
2. Pull the shrink disk off the hollow shaft.

Sizes 79 - 189:
If the outer ring does not come away from the inner ring, remove some of the tightening bolts and insert them into neighboring forcing threads.

Pull the shrink disk off the hollow shaft.

6.10.3.4 Cleaning and lubricating shrink disks

Soiled shrink disks must be cleaned and regreased prior to fitting.

Shrink disks that have been released need not be disassembled and regreased before being retensioned.

Procedure

1. Only grease the inner friction surfaces of the shrink disks. To do this, use a solid lubricant with a friction coefficient of μ = 0.04.
2. Use a paste containing MoS_2 to grease the bolts, applying the paste to the thread and underneath the head.

Clean the shrink disk.

Table 6-8 Lubricants for shrink disks

Lubricant	Sold as	Manufacturer
Molykote 321 R (lubricant paint)	Spray	DOW Corning
Molykote spray (powder spray)		
Molykote G Rapid	Spray or paste	
Molykombin UMFT 1	Spray	Klüber Lubrication
Unimily P5	Powder	
Aemasol MO 19 P	Spray or paste	A. C. Matthes

6.10.4 ShaftMount assembly system

6.10.4.1 General notes for the ShaftMount assembly system

⚠ WARNING

Risk of injury due to freely rotating parts

Attach the cover cap or protective cover.

NOTICE

Damaged components impair the correct function of the gearbox

If any components are damaged, the correct function of the gearbox will no longer be ensured.

Do not install any damaged gearbox components.

NOTICE
Lubricant on the machine shaft ① impairs the torque transmission Keep the bore in the tapered bushing ⑨ and the machine shaft ① completely free of any grease. Do not use impure solvents and dirty cleaning cloths.

NOTICE
Avoid overloading the individual bolts Do not exceed the maximum tightening torque for clamping screws ④ and ⑩.

Note

The ShaftMount assembly system axially secures the hollow shaft on the machine shaft.

Note

Apply a light coating of the oil provided to the locating hole for the tapered bushing ⑨ and bronze bushing ② in the hollow shaft ⑥.

Oil type of the provided oil: CLP VG 68 DIN 51517-3

Note

The thrust collar ⑤ must be placed at the correct position as in the delivered state.

Note

Before the ShaftMount assembly, attach the torque arm ⑦ to the gearbox.

6.10.4.2 Attaching the ShaftMount assembly system

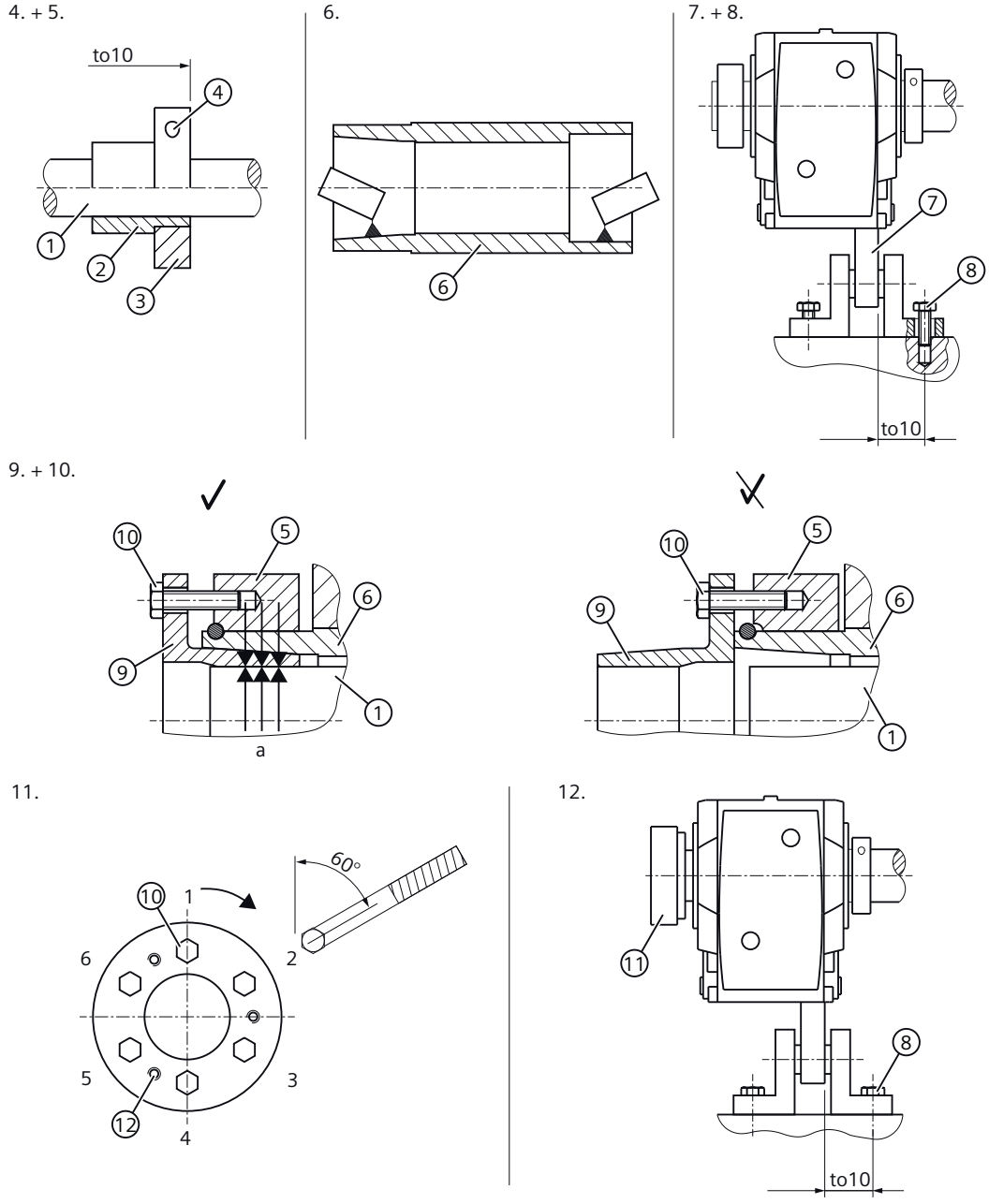

Figure 6-9 Attaching the ShaftMount assembly system

The numbers above the individual pictures refer to the work steps in the procedure.

a	Absolutely grease-free	⑦	Torque arm
①	Machine shaft	⑧	Screw
②	Bronze bushing	⑨	Tapered bushing
③	Clamping ring	⑩	Tightening bolt for the tapered bushing

④	Tightening bolt for the clamping ring	⑪	Protection cover / cover cap
⑤	Thrust collar	⑫	Threaded hole for the tightening bolt ⑩ during disassembly
⑥	Hollow shaft		

Procedure

1. Attach the torque arm ⑦ to the gearbox, as shown in Torque arms for slip-on gearboxes (Page 70).
2. Remove the corrosion protection coating using white spirit or a solvent on:
   - The shaft ends of the machine shaft ①,
   - The clamping ring ③,
   - The bronze bushing ②.
3. Check the seats or edges of the hollow shaft ⑥ and the machine shaft ① for damage. Contact Technical Support if you notice any damage.
4. Place the clamping ring ③ on the bronze bushing ②.
5. Position the bronze bushing ② with the clamping ring ③ on the machine shaft ①. Comply with the tightening torque of the clamping screw ④ and tolerance dimension to10.
6. Oil lightly the locating holes in the hollow shaft ⑥ for the tapered bushing ⑨ and bronze bushing ②. Remove any excessive oil using a clean cloth.
7. Push the gearbox with the installed torque arm ⑦ on the machine shaft ① against the clamping ring ③.
8. Only lightly attach torque arm ⑦ using screws ⑧ The gearbox must have some play for the subsequent mounting.
9. Ensure that the thrust collar ⑤ is placed at the correct position.
   If the thrust collar ⑤ is not placed at the correct position, bring the ring ⑤ into the correct position by tightening the tightening bolts ⑩ with turned tapered bushing ⑨.
10. Place the tapered bushing ⑨ on the machine shaft ①.
11. Use the torque wrench to turn each of the tightening bolts ⑩ equally (not crosswise), repeating this procedure several times. Comply with the tightening torque of clamping screw ⑩.
12. Tighten the bolts ⑧ of the torque-arm fastening, as shown in Torque arms for slip-on gearboxes (Page 70).
13. Attach the rubber cover or protection cover ⑪ included in the scope of delivery, as shown in Removing and installing the protection cover (Page 54).

You have attached the ShaftMount assembly system.

Table 6-9 Tolerance dimension, clamping screw ④ tightening torque

Gearbox type	Size	Tolerance dimension to10	Thread size ④	Tightening torque
		mm	Strength class 10.9	Nm
F, B, C	29	0.6 ... 2.1	M6	15
F, B, K, C	39	0.7 ... 2.2		
F, B, K, C	49	0.8 ... 2.6		
F, K, C	69	0.7 ... 2.5	M8	35
F, K	79	1.4 ... 3.2		
F, K, C	89	1.5 ... 3.4		

Table 6-10 Clamping screw ⑩ tightening torque

Gearbox type	Size	Thread size ⑩	Tightening torque
		Strength class 12.9	Nm
F, B, C	29	M5	10
F, B, K, C	39		
F, B, K, C	49	M6	16
F, K, C	69		
F, K	79	M8	38
F, K, C	89		

6.10.4.3 Removing the ShaftMount assembly system

Procedure

1. Remove all bolts ⑩ completely.
2. Screw the bolts ⑩ into the threaded holes ⑫.
3. Use the torque wrench to turn each of the bolts ⑩ equally (not crosswise), repeating this procedure several times. Comply with the tightening torque of screw ⑩. Repeat the task until the tapered bushing ⑨ has been freed.
4. Unscrew the bolts ⑩ and remove the tapered bushing ⑨.
5. Lower the gearbox from the machine shaft ①.

You have removed the ShaftMount assembly system.

6.10.5 Hollow shaft with splines

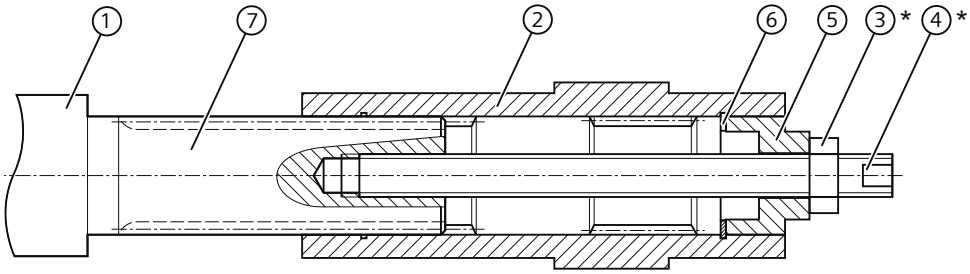

* Not included in scope of supply

① Machine shaft

② Hollow shaft

③ Hexagon nut

④ Threaded spindle

⑤ Disk

⑥ Locking ring

⑦ Mounting paste

Figure 6-10 Mounting the hollow shaft with splines

Instead of the nut and threaded spindle shown in the diagram, other types of equipment such as hydraulic lifting equipment may be used.

Procedure

1. Using benzine or a solvent, remove the anti-corrosion protection from the shaft ends and flanges.
2. Check the seats or edges of the hollow and machine shafts for any damage. Contact Technical Support if you notice any damage.
3. Apply the mounting paste ⑦ to the machine shaft ①. Apply the paste uniformly.
4. Fit the gearbox using the disk ⑤, threaded spindle ④ and nut ③. Support is provided by the hollow shaft ②.
5. Replace the nut ③ and the threaded spindle ④ with a screw. Tighten the bolts to the specified torque.

You have mounted the hollow shaft with splined shaft.

Table 6-11 Tightening torque for the screw

Thread size	M5	M6	M8	M10	M12	M16	M20	M24	M30
Tightening torque in Nm	5	8	8	14	24	60	120	200	400

6.10.6 Torque arms for slip-on gearboxes

6.10.6.1 General information regarding torque arms

Torque arms can absorb the reaction torque and the weight force of the gearbox.

Ex-version gearboxes
Worn or irreparably damaged rubber elements will not function properly.
Impact causes sparks
Immediately replace any damaged rubber elements.

NOTICE
Dangerous transient torques due to excess backlash
Carefully ensure that the torque arm does not result in excessive constraining forces. For example, due to the driven shaft running out-of-true.

NOTICE
Impermissible gearbox loading caused by incorrect mounting
Do not deform the torque arm when mounting.
The torque arm bush must be supported by bearings on both sides.

NOTICE
Damage to the rubber elements caused by solvent
Solvents, oils, greases, and fuels damage rubber elements.
Avoid contact.

6.10.6.2 Mounting torque arms on parallel shaft gearboxes

We recommend using pretensioned, damping rubber elements.

Fixing accessories such as brackets, bolts, nuts, etc., are not included in the scope of supply.

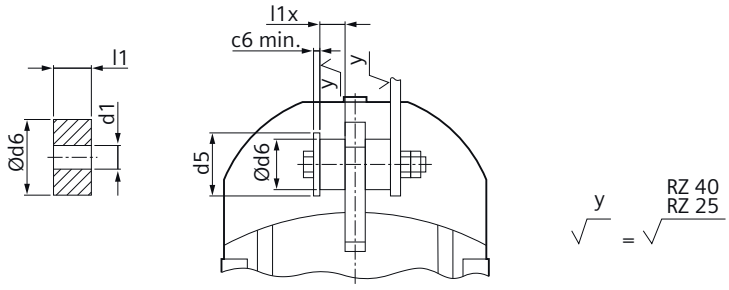

Figure 6-11 Installation suggestion for torque arms on F.29 - F.189

Size	Rubber buffer				Washer	
	Unten-sioned	Tensioned				
	l1	l1x	d6	d1	d5	$c6_{min}$
	mm	mm	mm	mm	mm	mm
29	15	14.0	30	10.5	40	4
39		13.5				
49	20	18.5	40	12.5	45	6
69		18.5			50	
79		17.5				
89	30	28	60	21	75	8
109		27.5				
129	40	37.5	80	25	100	10
149		36.5				
169	50	47.5	120	31	140	12
189		46.5				

Procedure

1. Use the washers according to the table above.
2. Use two nuts to secure the screw connection (lock nuts).
3. Tighten the bolts until the rubber buffers are pretensioned to the dimension l1x.

You have now installed the torque arm.

6.10.6.3 Mounting torque arms on bevel gearboxes and helical worm gearboxes

NOTICE
Impermissible loading caused by incorrect mounting
The torque arm bush must be supported by bearings on both sides.
After mounting, the bushing must have some axial play.

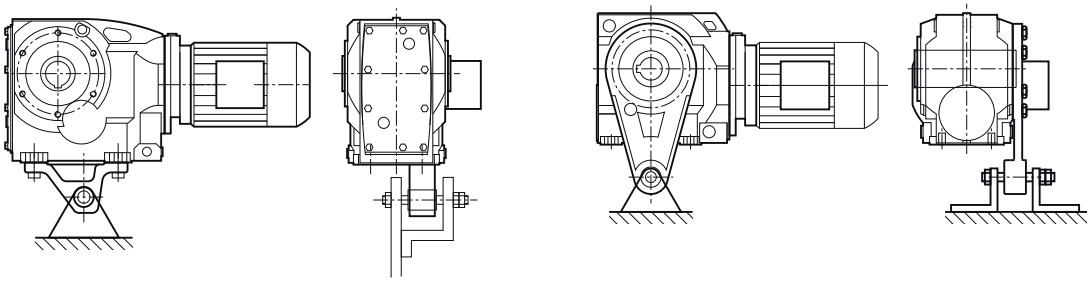

Figure 6-12 Mounting suggestion for torque arm on foot and flange

The torque arm can be fitted in various positions, depending on the hole circle pitch.

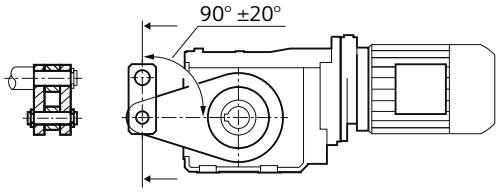

Figure 6-13 Toggle lever design

For a toggle lever design, derive the force in the range of 90° ±20°.

Procedure

1. Clean the contact surfaces between the housing and the torque arm.
2. Tighten the bolts to the specified torque.

You have now mounted the torque arm.

Table 6-12 Tightening torque for screws of strength class 8.8

Thread size	M8	M10	M12	M16	M20	M24	M36
Tightening torque in Nm	25	50	90	210	450	750	2 600

6.10.6.4 Attaching the torque arm to worm geared motor S

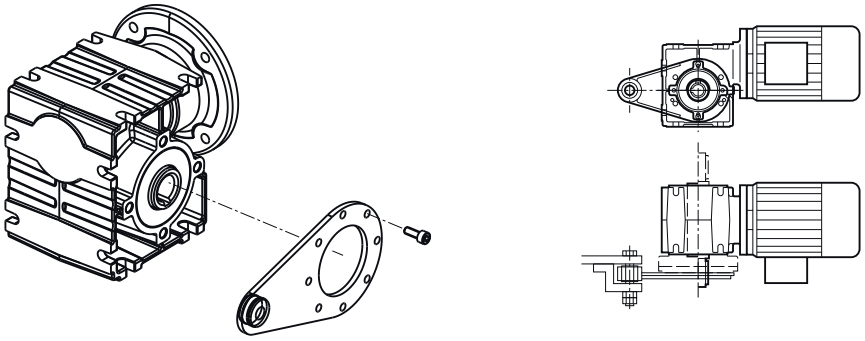

Figure 6-14 Attaching the torque arm

The torque arm can be mounted in various positions, depending on the hole circle pitch.

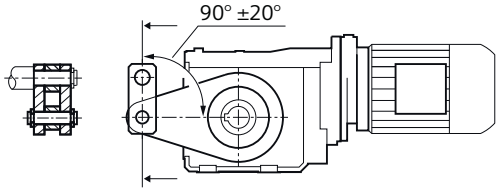

Figure 6-15 Toggle lever design

For a toggle lever design, derive the force in the range of 90° ±20°.

Procedure

1. Clean the contact surfaces between the housing and the torque arm.
2. Tighten the M6 screws to 10 Nm torque.

You have now mounted the torque arm.

Commissioning 7

7.1 General information about commissioning

⚠ WARNING
Unintentional starting of the drive unit Carefully ensure that the drive unit cannot start accidentally. Attach a warning notice at the switch on location.

⚠ WARNING
Risk of slipping on oil Immediately remove any spilt oil with an oil-binding agent.

Checking the pressure breather valve

Check that the breather valve is activated.

If the breather valve has a transport lock, then remove it before commissioning.

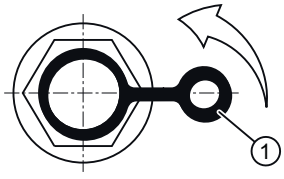

Figure 7-1 Pressure breather valve with securing clip

Remove the transport fixture by pulling the securing clip ① in the direction of the arrow.

7.2 Checking the oil level prior to commissioning

Check the oil level before commissioning. If necessary, correct the oil level.

Innomotics recommends a complete oil change after a storage time longer than 24 months:

- For gearboxes with long-term preservation.
- For gearboxes supplied completely filled with oil.

Follow Checking and changing lubricants (Page 94).

Gearbox in special mounting position

The gearbox is intended for a specific rotation angle and is delivered with the correct quantity of oil for this purpose.

It is not possible to check the oil level. You will find information regarding oil quantity and type of oil on the rating plate.

7.3 Mount the oil expansion unit

An oil expansion unit can be used depending on the power, drive speed, mounting position and transmission ratio. The oil expansion unit is used to equalize changes in the oil volume caused by temperature fluctuations in operation.

Before commissioning the gearbox, replace the screw plug with the oil expansion unit.

Oil expansion unit size 39 - 89

The unit is supplied as a mounting set. Mount the unit on the geared motor, either vertically or at an angle.

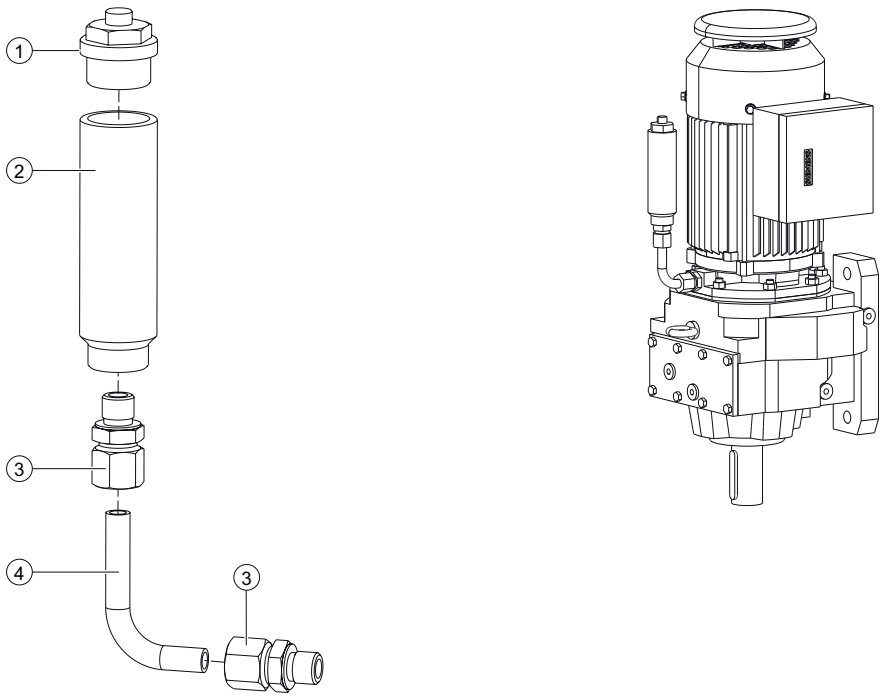

①	Pressure relief valve	④	Tube bend
②	Unit	⑤	Screwed connection
③	Screwed joint		

Figure 7-2 Installing oil expansion unit size 39 - 89

Procedure

1. Assemble the mounting kit ① - ⑤.
2. Screw on the unit with the screwed connection ⑤ at the uppermost drill hole of the gearbox housing or of the motor bearing shield.
3. Align the oil expansion unit so that it is vertical. Aligning it at an angle of ±45° to the vertical is permissible if space is restricted.

Oil expansion unit size 109 - 189

NOTICE
Hose with leaks The hose of the oil expansion unit is subject to a natural aging process. Check the hose for tears or leaks. Never commission a leaky hose. Replace the hose. The hose of the oil expansion unit is not suitable for ambient temperatures below -25 °C. If the ambient temperatures differ, contact Technical Support.

The unit is supplied as a mounting set. The mounting is described in the Compact mounting instructions 2530-1 provided.

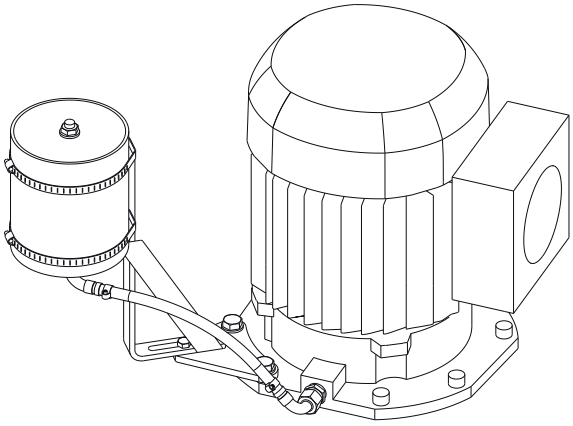

Figure 7-3 Example of an oil expansion unit size 109-189

7.4 Electrical oil level check (optional)

7.4.1 General information

The oil level is optionally checked by the oil level sensor when the gearbox is not running. An optional electrical oil level control during operation can lead to incorrect information.

The oil level sensor is screwed in instead of the oil check screw and is premounted at the factory. The position of the oil check screw can be found in Chapter Mounting positions (Page 139).

7.4.2 Mounting the oil level control

Standard Ex

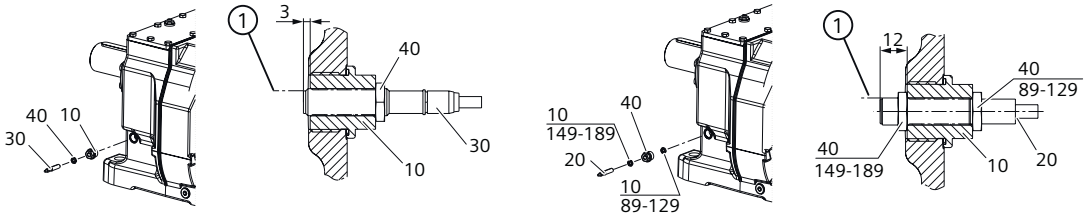

1	Oil level
10	Reduction G3/8" or G3/4"
20	Encoder IMP CJ1-12GK-N for hazardous areas
30	Encoder IMP CBB4-12GH70-E2 for non-hazardous areas
40	Hexagon nut M12x1

Figure 7-4 Mounting the sensor for oil level control

Before commissioning the gearbox, check the functionality of the capacitive oil level monitoring system.

Procedure

Before commissioning or after the oil change with sensor installed in the factory.

Function test:

1. Connect the capacitive sensor.
2. Drain oil at the oil drain plug or oil drain valve until the capacitive sensor outputs a switching signal which indicates "Fault".
3. Collect the drained oil.
4. Stop draining the oil. Fill the gearbox with the oil that has been collected.
5. After refilling, the "Fault" signal must disappear. The oil level is correct.

You have mounted the capacitive sensor.

⚠ CAUTION

Functional restriction of the sensor

Carefully comply with the following:

- Do not damage the cables or the insulation.
- Route the feeder cable without any tension.
- Avoid significant bending, kinks and mechanical loads applied at individual points.

Connection

Non-hazardous area

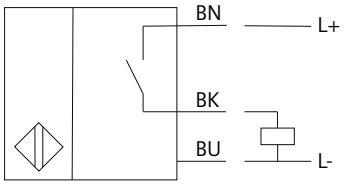

Hazardous area

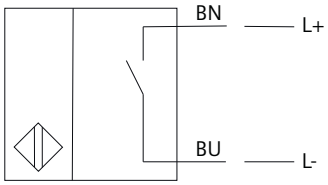

Ex-version gearboxes

Only use the oil level sensor in hazardous areas in combination with a disconnecting device.

The disconnecting device must be approved for the Ex-version.

Install the disconnecting device outside the hazardous area.

Comply with the operating instructions of the disconnector.

7.5 Electrical oil temperature monitoring (optional)

7.5.1 General information

The oil temperature is optionally monitored by the Pt100 resistance thermometer.

The oil temperature monitor is positioned in the area of the gearbox oil sump. The sensor pocket (item 1476) of the thermometer is screwed into the gearbox at the factory and closed with a sealing cap. Final assembly is carried out by the operator.

Technical specifications of the sensor

- Explosion protection type: II 2G Ex ia IIC Gb, II 2D Ex ia IIIC Db
- Protection class IP68
- 3-wire input
- Supply line of the sensor: S3x22/7-PTFE/PTFE, 0.36 mm^2, 2000 mm long, WH (RD/RD/WH), external diameter 3.8 mm, free ends
- Sensor ambient temperature: -40° C to +180° C
- Sensor pocket ambient temperature: -40° C to +125° C

CAUTION

Permissible temperature limit

The thermal limit temperature is 90° C oil sump temperature. This ensures a sufficient safety distance from the maximum permissible surface temperature.

7.5.2 Mounting the oil temperature monitor

The cable gland ②, ③, ④ is threaded onto the sensor cable ⑤.

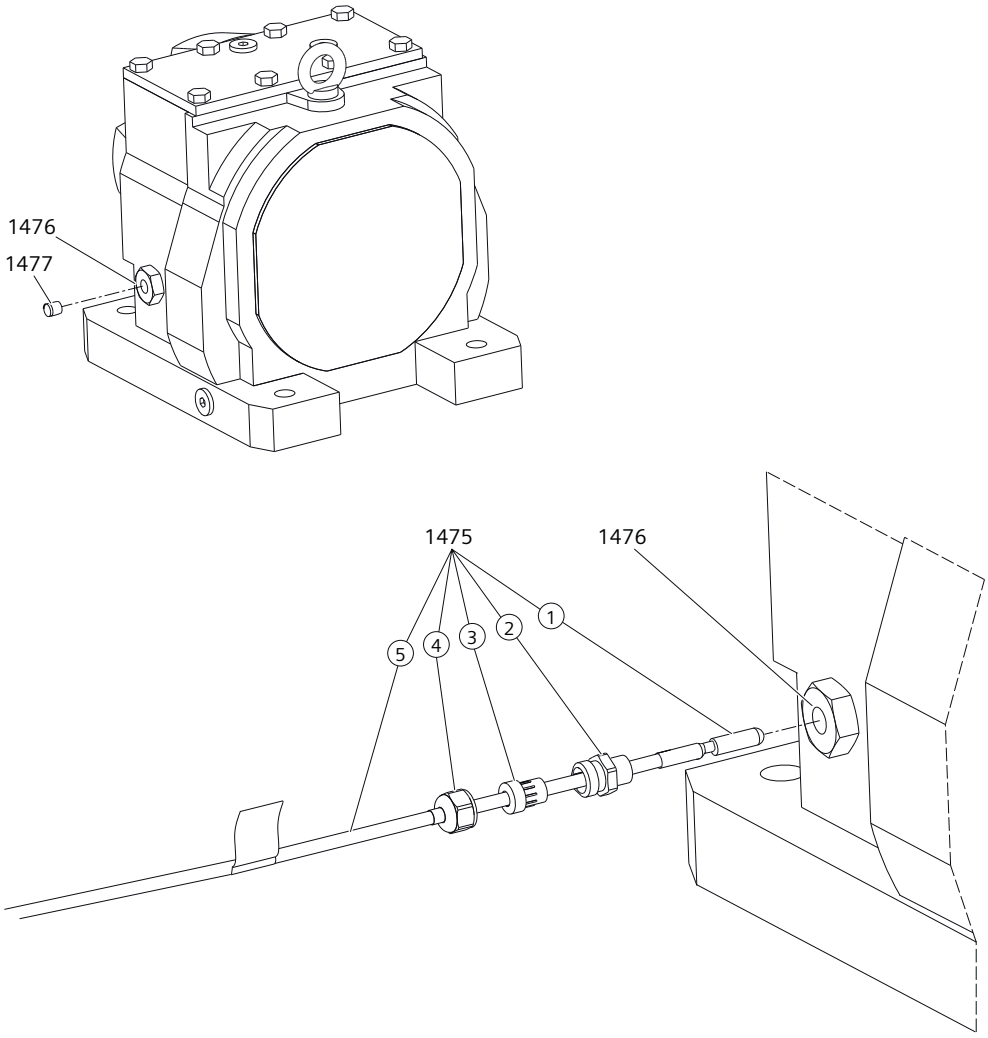

Figure 7-5 Mounting the sensor for oil temperature monitoring

1475	Resistance thermometer consisting of ①, ②, ③, ④, ⑤	②	Intermediate connectors
1476	Sensor pocket	③	Sealing element
1477	Sealing cap	④	Screw-down nut
①	Sensor	⑤	Sensor cable

Procedure

1. Remove the sealing cap 1477 from the sensor pocket 1476.
2. Unscrew the cable gland ②, ③, ④ on the sensor cable ⑤.
3. Carefully insert the sensor ① completely into the sensor pocket 1476 until it reaches the bottom of the bore hole.

4. Screw the intermediate socket ② into the bore of the sensor pocket 1476 with wrench size 11 and 4 Nm tightening torque.
5. Insert the sealing element ③ into the intermediate socket ②.
6. Tighten the screw-down nut ④ with wrench size 11 and 4 Nm tightening torque.

You have mounted the sensor for oil temperature monitoring.

⚠ CAUTION

Functional restriction of the sensor

Carefully comply with the following:

- Threads, bore holes and sensor ① must be free of any dirt and residues.
- The sensor cable ⑤ must not rotate when the screw-down nut ④ is tightened.
- Sensor ① must be inserted completely, approx. 29 mm, into sensor pocket 1476.
- Do not damage the cables or the insulation.
- Route the feeder cable without any tension.
- Avoid significant bending, kinks and mechanical loads applied at individual points.

Ex-version of gearbox and geared motor
Comply with DIN EN 60079-14 when mounting and installing the sensor.

Circuitry of the connections according to EN 60751.

Ex-version of gearbox and geared motor
Operate the Pt100 resistance thermometer with a disconnecting device.
The disconnecting device must be approved for the Ex-version.
Install the disconnecting device outside the hazardous area.
Comply with the operating instructions of the disconnector.

7.6 Options of the VLplus heavy-duty bearing system

7.6.1 Automatic regreasing device

Gearboxes with the VLplus heavy-duty bearing system can be optionally supplied with an automatic regreasing system.

The automatic regreasing device can be mounted in any position and can be used underwater.

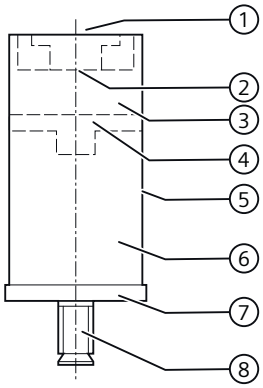

①	Lubrication time controller	⑤	Transparent housing
②	Pressure generator	⑥	Rolling bearing grease
③	H_2 gas	⑦	Unit floor
④	Pressure piston	⑧	Connection thread

Figure 7-6 Automatic regreasing device

Table 7-1 Technical data

Grease fill quantity	125 ml
Adjustable lubrication duration	0 ... 12 months
Permissible ambient temperature	-20° C ... +55° C
Max. operating pressure	3 bar
Pressure generator	Hydrogen gas generating cell
Recommended storage temperature	+20° C
Usage period	Within 2 years of the filling date
Weight including grease fill	Approx. 190 g

⚠ CAUTION

Closed lubricator bursts

Overpressure will result if the lubricator is not opened and the grease channels are contaminated. At an overpressure of approximately 5 bar, the lubricator will burst at the preset breaking point between the housing and the funnel.

Open the lubricator before commissioning.

Press fresh grease into blocked channels using a grease gun.

Note

Fill the lubricant channels and bearings with grease before installing the lubricator.

Procedure

1. Clean the area around the connection thread of the greasing point.
2. Use a knife to cut off the seal at the lubricator outlet. Or remove the screw plug.

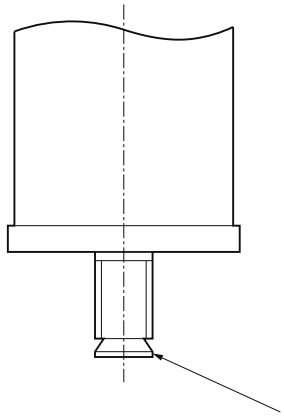

Figure 7-7 Sealing the lubricator

3. Screw the lubricator into the connection thread.

You have mounted the automatic regreasing system.

Setting the lubrication time

⚠ CAUTION
Setting the wrong lubrication time The lubrication time is heavily influenced by the resistance in the lubricant channels and the ambient temperature. Check the actual lubrication time during operation.

The actual lubrication time is the time it takes for the lubricator to be completely emptied. The lubrication time is influenced by the resistance in the lubricant channels and the ambient temperature.

At an ambient temperature of -10° C, the actual lubrication time is twice that for the set temperature.

At an ambient temperature of +40 °C, the actual lubrication time drops to half that for the set temperature.

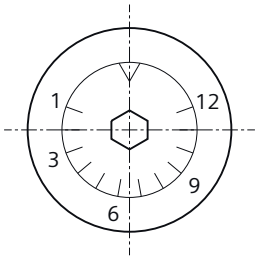

Figure 7-8 Lubrication time controller

Procedure

1. Set the lubrication time using a 3 mm Allen key.
2. Note the date of commissioning and the lubrication time on the lubricator.

You have set the lubrication time controller.

The times in months listed in the table are guide values.

Table 7-2 Timing in months on the lubrication time controller

Size	89	109	129	149	169
Months	12	12	12	12	11

7.6.2 Dry-well version with oil sensor

Comply with the separate operating instructions for the oil level sensor.

The oil sensor can also be deployed for Ex-version gearboxes.

Ex-version gearboxes
The oil sensor operates with a disconnecting device.
The disconnecting device must be approved for the Ex-version.
Install the disconnecting device outside the hazardous area.
Comply with the operating instructions of the disconnector.

CAUTION

Functional restriction of the sensor

Carefully comply with the following:

- The sensor must be free of any dirt and residue.
- Do not damage the cables or the insulation.
- Route the feeder cable without any tension.
- Avoid significant bending, kinks and mechanical loads applied at individual points.

Operation

8

Ex-version of gearbox and geared motor

The difference between the temperature of the housing and the ambient temperature of max. +40° C must not exceed 70 K.

If the ambient temperatures differ, contact Technical Support.

Using a suitable temperature sensor, measure the temperature at the lowest point of the housing (oil sump) or at the mounting surface in the case of output units. We recommend that you monitor the gearbox temperature indirectly by monitoring the motor current.

Changes are an indication of possible incipient damage.

CAUTION

Malfunctions can cause injuries or gearbox damage

In the event of any changes during operation, switch off the drive unit immediately.

Determine the cause of the fault using the fault table (Page 87). Remedy faults or have faults remedied.

Check the gearbox or the geared motor during operation for:

- Excessive operating temperature
- Smooth and vibration-free operation
- Changes in gear noise
- Possible oil leakage at the housing and shaft seals

Faults, causes and remedies

9

Note

Faults and malfunctions that occur during the warranty period and requiring repair work on the gearbox must be remedied only by Technical Support. If faults occur without a clearly identifiable cause after the warranty period has elapsed, Innomotics recommends the services provided by Technical Support.

If you need the help from the Technical Support, please have the following information ready:

- Rating plate data
- Nature and extent of the fault
- Suspected cause

Table 9-1 Faults, causes and remedies

Faults	Causes	Remedy
Unusual noise on the gearbox.	Oil level too low.	Check the oil level (Page 94).
	Foreign bodies in the oil (irregular noise).	Checking the oil quality (Page 103). Cleaning gearbox and motor (Page 115). Change the oil (Page 94).
	Excessive bearing play and / or bearing defective.	Check the bearings, possibly replace.
	Defective gearing.	Check the gearing, possibly replace.
	Fastening bolts loose.	Checking tightness of fastening bolts (Page 116).
	Excessive external load on the drive input and output.	Check the load against rated data (you might need to correct the belt tension, for example).
	Transport damage.	Check the gearbox for damage in transit.
	Damage due to blockage during commissioning.	Call Technical Support.
Unusual noise from the drive unit.	Drive unit bearing not lubricated (motor size 160 and higher).	Regrease bearing (Page 107).
	Excessive bearing play and / or bearing defective.	Check the bearings, possibly replace.
	Fastening bolts loose.	Checking tightness of fastening bolts (Page 116).
Unusual motor noise.	Excessive bearing play and / or bearing defective.	Check the bearings, possibly replace.
	Motor brake is rubbing.	Check the air gap, possibly readjust
	Inverter parameterization.	Correct the parameterization.

Faults	Causes	Remedy
Oil escapes.	Incorrect oil level for the mounting position being used.	Check the mounting position (Page 139) and the oil level (Page 94).
	Gearbox leaks.	Checking the gearbox for leaks (Page 114).
	Overpressure due to lack of venting.	Install the venting as appropriate for the mounting position (Page 139).
	Overpressure due to soiled venting.	Clean the venting (Page 114).
	Shaft sealing rings defective.	Replace the shaft sealing rings.
	Cover / flange bolts loose.	Checking tightness of fastening bolts (Page 116). Continue to monitor the gearbox.
	Surface sealing defective (e.g. on cover, flange).	Reseal.
	Damage in transit (e.g. hairline cracks).	Check the gearbox for damage in transit.
Oil leak at the gearbox vent	Incorrect oil level for the mounting position used and / or incorrect venting position.	Check the venting position, mounting position (Page 139) and the oil level (Page 94).
	Frequent cold starts during which the oil foams up.	Call Technical Support.
Gearbox overheats.	Motor fan cover and / or gearbox very dirty.	Clean the fan cover and surface of the geared motor (Page 115).
	Incorrect oil level for the mounting position being used.	Check the mounting position (Page 139) and the oil level (Page 94).
	Incorrect oil being used (e.g. incorrect viscosity).	Checking the oil quality (Page 103).
	Oil is too old.	Check the date of last oil change. Possibly Change the oil (Page 94).
	Excessive bearing play and / or bearing defective.	Check the bearings, possibly replace.
	Coolant temperature outside the permissible range.	Adjust the cooling air to the right temperature
Output shaft does not turn when the motor is running.	Force flow interrupted by breakage in gearbox.	Call Technical Support.
Geared motor only starts with difficulty or not at all.	Incorrect oil level for the mounting position being used.	Check the mounting position (Page 139) and the oil level (Page 94).
	Incorrect oil being used (e.g. incorrect viscosity).	Checking the oil quality (Page 103).
	Excessive external load on the drive input and output.	Check the load against rated data (you might need to correct the belt tension, for example).
	Motor brake is not released.	Check the circuit / connection of the brake. Check brake for wear and readjust if necessary.
	Geared motor runs against backstop.	Change the direction of motor or backstop rotation.

Faults	Causes	Remedy
Excessive play at drive input and output.	Flexible elements worn (e.g. on couplings).	Replace flexible elements.
	Positive connection disrupted by overload.	Call Technical Support.
Speed and torque drop.	Belt tension too low (for belt drive).	Check the belt tension, possibly replace the belt.

Service and maintenance 10

10.1 General notes about maintenance work

Ex-version of gearbox and geared motor

All measures, checks and their results must be documented by the company operating the gearbox and records kept in a safe place for 10 years.

WARNING

Unintentional starting of the drive unit

Carefully ensure that the drive unit cannot start accidentally.

Attach a warning notice at the switch on location.

NOTICE

Improper maintenance

Only authorized qualified personnel may perform the maintenance and servicing. Only install original parts supplied by Innomotics.

Note

Worm gearbox S is lubricated for life.

Worm gearbox S does not require lubricant to be changed.

Only qualified personnel may perform inspection, maintenance and service work. Comply with the information in Chapter Specific safety instructions (Page 27).

Table 10-1 Maintenance measures

Remedy	Interval	Description of work
Monitor and check the geared motor for unusual noise, vibrations, and changes.	Daily; if possible, more frequently during operation.	Operation (Page 85)
Check the housing temperature.	After 3 hours, the first day, then monthly.	
Check the bearings for bearing noise	Every 3 000 operating hours, or at least every 6 months.	
Check the oil level.	After the first day, then every 3 000 operating hours, or at least every 6 months.	Checking and changing lubricants (Page 94)
Check the oil level sensor	Regularly and after oil changes.	Checking the oil level sensor (optional) (Page 115)

Remedy	Interval	Description of work
Check the oil quality.	Every 6 months.	Checking the oil quality (Page 103)
Change the oil.	Every 2 years or 10,000 operating hours [1].	Checking and changing lubricants (Page 94)
Visual inspection of the gearbox and shaft sealing ring for leakage.	After the first day, then monthly.	Checking the gearbox for leaks (Page 114)
Possibly replace the vent valve.	Once a year.	Replacing the vent valve (Page 114)
Cleaning the gearbox or geared motor.	Depending on degree of soiling, at least every 6 months.	Cleaning gearbox and motor (Page 115)
Carry out a complete inspection of the geared motor.	Every 12 months.	Inspecting the gearbox (Page 116)
Check the friction clutch, possibly readjust.	After 500 hours, then yearly and after each blockage.	Comply with the 2039 operating instructions.
Check the flexible claw coupling.	For the first time after 3 years, then annually.	Comply with the 2039 operating instructions.
Check that fastening bolts on gearboxes and add-on elements are securely tightened. Check that covers and plugs are securely fastened.	After 3 hours, then every 2 years.	Checking tightness of fastening bolts (Page 116)
Change the rolling bearing grease.	When the oil is changed.	Change the roller bearing grease (Page 107)
Replace the bearing.	-	Replace bearings (Page 114)
Check the rubber buffer of the torque arms.	Every 6 months.	Torque arms for slip-on gearboxes (Page 70)
Check the hose of the oil expansion unit.	Check regularly, renew every 4 years at the latest.	Replacing the hose of the oil expansion unit (Page 117)
Lubricate the XLplus and VLplus heavy-duty bearing systems.	-	Lubrication of the XLplus and VLplus heavy-duty bearing systems (Page 111)
Check that the paint coating is undamaged.	Every 6 months	Surface treatment (Page 36)
Check that the ground connection is firmly connected.	Every 6 months	More detailed information is provided under Innomotics XP 1MB1 explosion protected motors and Innomotics XP 1MB..5/6 explosion protected motors

[1] The intervals can be doubled when using synthetic oils. The data specified is valid for an oil temperature of +80° C. See the figure titled "Guide values for oil change intervals" for the intervals for other temperatures.

10.2 Parts subject to wear

Gear teeth

When carefully complying with dimensioning guidelines and maintenance intervals, after running-in, the gearing of the gearboxes and geared motors is almost wear-free. Worm gearing is an exception as a result of its inherent design. Depending on the operating conditions, the flanks of worm gear teeth can exhibit differing levels of wear, which is influenced by:

- Input speed
- Load level
- Operating temperature
- Lubricant
- Operating mode and switching frequency

Rolling bearings

Rolling bearings have a finite life even in ideal operating conditions.

The calculated nominal bearing life is 90 % of the achievable service life. The bearing life depends on the following:

- Input speed
- Bearing load level
- Operating temperature
- Lubricant and supply of lubricant to the rolling bearing
- Maintenance

Rolling bearings must be regularly checked. Comply with the information in Chapter General notes about maintenance work (Page 91).

Lubricants

Depending on the application conditions, lubricants have a limited service life as they are subject to natural aging. The oil service life especially depends on the oil sump temperature. Refer to Chapter Service life of the lubricants (Page 107) for guide values relating to oil change intervals. In the case of different operating conditions, contact Technical Support.

Shaft sealing rings

High quality radial shaft sealing rings are used to seal the oil space in the gearboxes. The shaft sealing rings prevent lubricant from escaping from the housing at the shaft outlet and prevent contaminants from entering the housing. The radial shaft sealing ring is provided with an additional protective lip to protect against contaminants from outside. The influencing factors are:

- Speed and peripheral velocity at the sealing lip
- Ambient conditions (temperature, dust, moisture, pressure, chemicals, radiation)
- Type of seal
- Seal material

- Lubricant
- Surface quality of the sealing location
- Lubricant supply at the sealing location

Predicting the service life is not possible as a result of the various influencing factors, and depends on the application conditions. Radial shaft sealing rings must be regularly checked to ensure that they are leak-tight. Comply with the information in Chapter General notes about maintenance work (Page 91).

Cam ring / coupling ring

Gearboxes with adapter for mounting standard motors, in versions KU, K2, K3, KS, KQ, K8, are equipped with torsionally flexible couplings to transmit force and dampen torsional oscillation. Shock and torsional oscillation are dampened by the annular gear between the coupling hubs. The service life of the annular gear depends on various factors:

- Operating conditions (operating temperature, chemicals)
- Application conditions (amount of shock, starting behavior, service factor)

Comply with the inspection intervals specified in Chapter General notes about maintenance work (Page 91).

10.3 Checking and changing lubricants

10.3.1 General safety notes

⚠ WARNING

Danger of scalding from the hot oil emerging from the unit

Before starting any work wait until the oil has cooled down to below +30 °C.

⚠ WARNING

Risk of slipping on oil

Immediately remove any spilt oil with an oil-binding agent.

NOTICE

Damage to the gearbox caused by incorrect oil quantities

The oil quantity and the position of the sealing elements are determined by the mounting position.

After unscrewing the oil level screw, the oil level may not lie below the specified fill level.

NOTICE
Damage to the gearbox due to open oil holes Close the gearbox immediately after checking the oil level or changing the oil. Dirt and damaging atmosphere penetrate through open oil holes

Note

Information about oil

Refer to the rating plate for the type of oil, oil viscosity and quantity of oil required.

For compatibility of oils, follow Chapter Recommended lubricants (Page 109).

Note

Sizes 19 and 29

Gearbox sizes 19 and 29 are lubricated for life. There is no opening to check the oil level. An oil change is not required.

For mounting positions M2 and M4, the gearboxes have a breather valve.

C29 has a breather valve in all mounting positions.

Note

Tandem gearbox - intermediate helical gearbox

- In a horizontal operating position the bulging part of the housing of the intermediate helical gearbox generally faces vertically downwards.
- The oil quantity is specified for every individual gearbox and is valid for the standard mounting position.
- Carry out the following work for each individual gearbox:
  Check the oil level.
  For the main gearbox D/Z, it is not possible to check the oil level in mounting position M4. The oil level is above the oil level bore so that the bearings above it are lubricated.
  Check the properties of the oil.
  Change the oil.
  Fill/add oil.

Note

Gearbox in special mounting position

The gearbox is intended for a specific rotation angle and is delivered with the correct quantity of oil for this purpose.

It is not possible to check the oil level. You will find information regarding oil quantity and type of oil on the rating plate.

When draining the oil, a higher residual quantity of oil remains in the gearbox. When you change the oil, remove any residual oil.

10.3.2 Checking the oil level

NOTICE
The gearbox oil volume changes depending on the temperature If the temperature rises, the volume increases. For significant temperature differences and fill quantities, the volume difference can be several liters. Check the oil level while still slightly warm, approximately 30 minutes after switching off the drive unit.

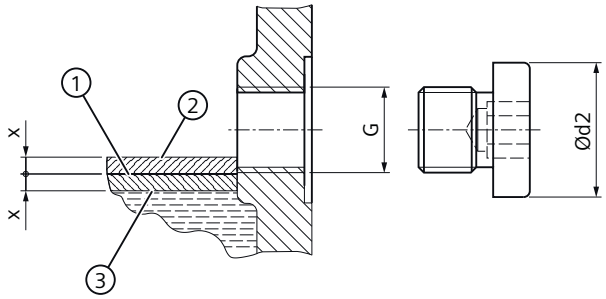

① Specified oil level
② Maximum oil level
③ Minimum oil level

Figure 10-1 Oil level in the gearbox housing

Table 10-2 Minimum and maximum fill levels x

Oil level hole	Ød2	Fill level x	Tightening torque
	mm	mm	Nm
G 1/8"	14	2.5	10
G 1/4"	18	3	10
G 3/8"	22	4	25
G 3/4"	32	7	50

Procedure

1. Switch off the power supply to the drive unit.
2. Unscrew the oil level plug; more detailed information is provided in Chapter Mounting positions (Page 139). Oil escapes if the maximum fill level is above the plug hole.
3. Check the oil level. Observe the fill level x.
4. Correct the oil level and check it again.
5. Check the state of the sealing ring on the sealing element. If the sealing ring is damaged, replace the sealing element with a new one.
6. After checking, seal the gearbox immediately using the sealing element.

You have now checked the oil level in the gearbox housing.

10.3.3 Check the oil level for gearboxes with higher oil level in mounting position M4

Main gearboxes "a" DF, ZF, F., K. for tandem gearboxes do not have any check hole as shown in Figure 10-1.

The oil level for gearboxes with higher oil level in mounting position M4 can be checked as subsequently described.

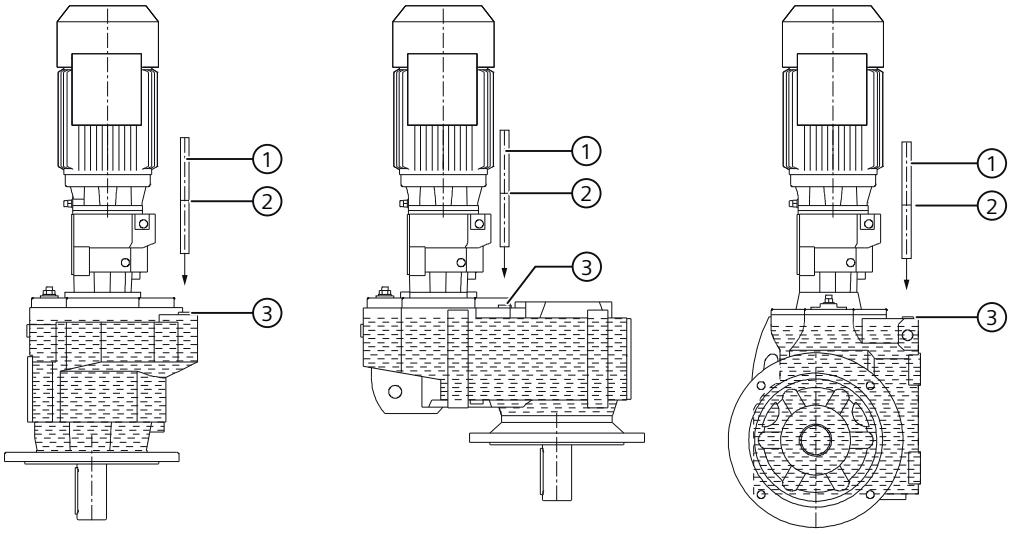

① Dipstick / measuring device
② Marking
③ Screw plug

Figure 10-2 Oil level check for tandem gearbox mounting position M4

Procedure

1. Switch off the power supply to the drive unit.
2. Remove the screw plug ③.
3. Make a mark ② on a suitable measuring stick ①.
4. Insert the dipstick ① vertically into the opening until mark ② is level with the screw plug seat ③.
5. Pull out the dipstick ① vertically.
6. Measure the distance "x" on the dipstick ①.
7. Compare the value "x" with the value for distance "x" as shown in the table.
8. Correct the oil level and check it again.
9. Check the condition of the sealing ring on screw plug ③ and replace the sealing ring.
10. Close and seal the gearbox using the screw plug ③.

You have checked the oil level of the tandem gearbox.

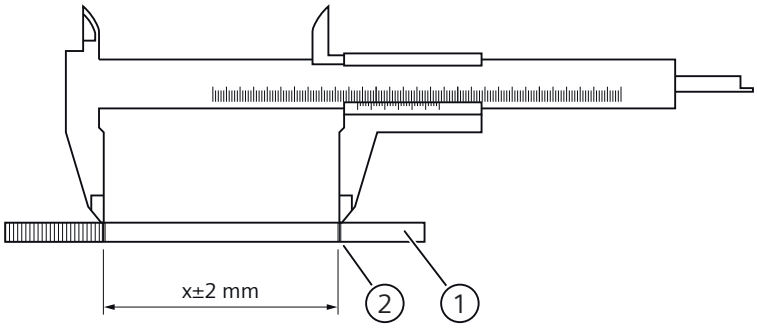

① Dipstick
② Marking

Figure 10-3 Distance "x"

Table 10-3 Values for distance "x"

Gearbox type	Distance "x" in mounting position M4	Oil hole position	
	mm		
DZF 49	15	2	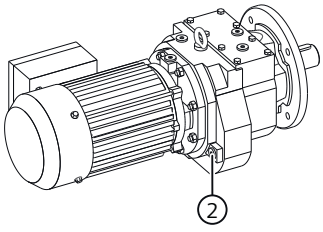
DZF 59	15	2	
DZF 69	15	2	
DZF 79	17	2	
DZF 89	20	2	
DF 109	26	2	
DF 129	29	2	
DF 149	32	2	
DF 169	26	2	
DF 189	49	2	
FD/Z / FD/ZF 29	12	2	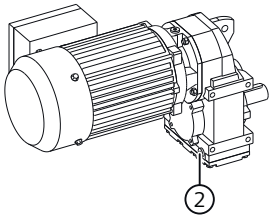
FD/Z / FD/ZF 39	7	3	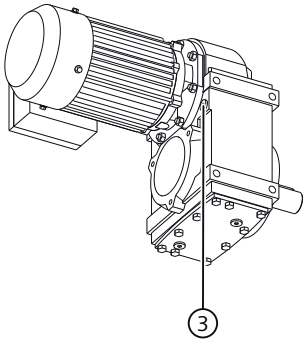
FD/Z / FD/ZF 49	13	3	
FD/Z / FD/ZF 69	21	3	
FD/Z / FD/ZF 79	20	3	
FD/Z / FD/ZF 89	12	3	
FD/Z / FD/ZF 109	25	3	
FD / FDF 129	12	3	
FD / FDF 149	20	3	
FD / FDF 169	13	3	
FD / FDF 189	34	3	

Gearbox type	Distance "x" in mounting position M4	Oil hole position
	mm	
K / K.Z / KF 39	39	7
K / K.Z / KF 49	12	7
K / K.Z / KF 69	12	7
K / K.Z / KF 79	12	7
K / K.Z / KF 89	12	7
K / K.Z / KF 109	12	7
K / K.Z / KF 129	12	7
K / K.Z / KF 149	16	7
K / K.Z / KF 169	16	7
K / K.Z / KF 189	16	7

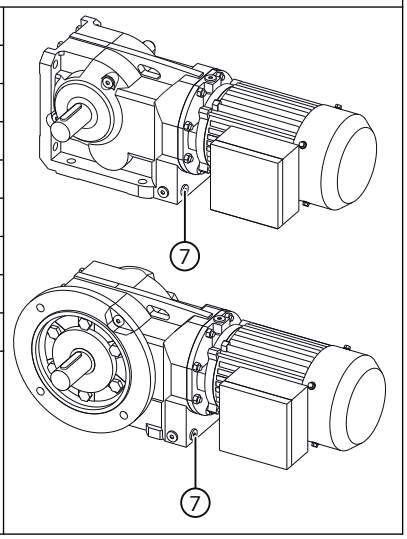

10.3.4 Check the oil level for gearboxes with higher oil level in mounting position M6

The main gearboxes "a" F. for tandem gearboxes do not have any check hole.

The oil level for gearboxes with higher oil level in mounting position M6 can be checked as subsequently described.

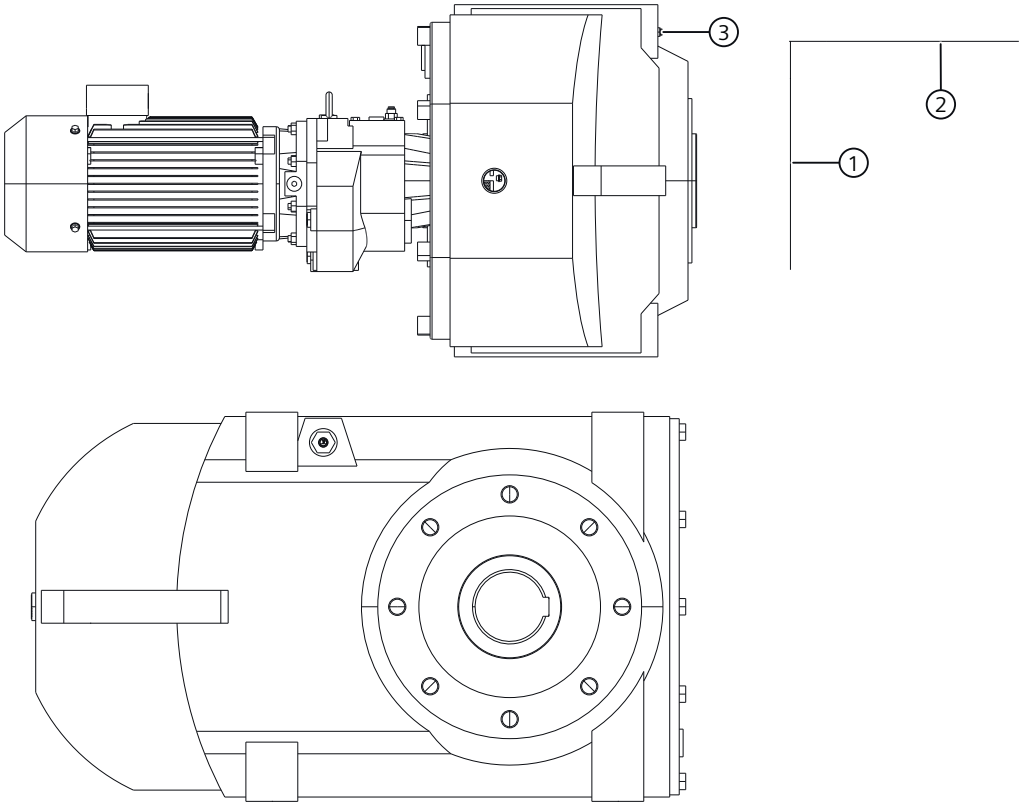

① Dipstick / measuring device
② Starting point
③ Screw plug

Figure 10-4 Oil level check for tandem gearbox mounting position M6

Procedure

1. Switch off the power supply to the drive unit.
2. Remove the screw plug ③.
3. Insert the dipstick ① through the opening. Place the dipstick on the hole.
4. Pull out the dipstick ①.
5. Measure the distance "x" on the dipstick ① from the starting point ②.
6. Compare the value "x" with the value for distance "x" as shown in the table.
7. Correct the oil level and check it again.
8. Check the condition of the sealing ring on screw plug ③ and replace the sealing ring.
9. Close and seal the gearbox using the screw plug ③.

You have checked the oil level of the tandem gearbox.

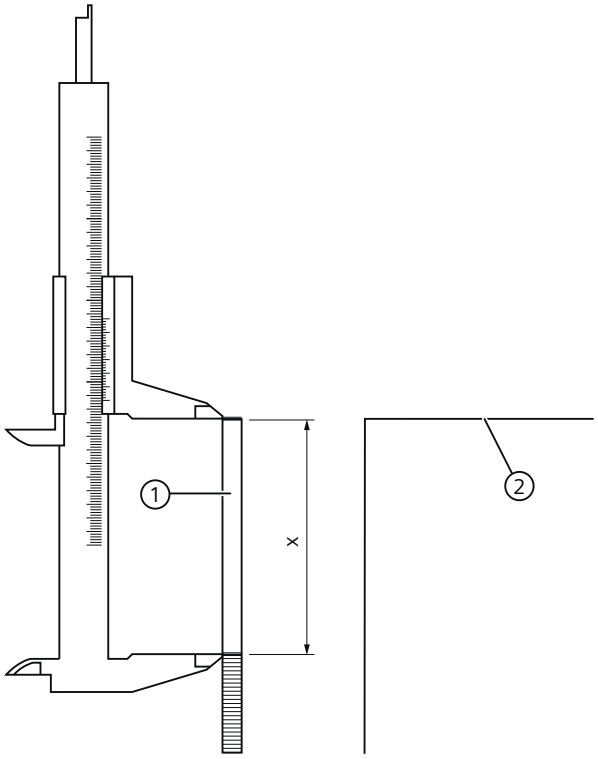

① Dipstick / measuring device
② Starting point

Figure 10-5 Distance x for mounting position M6

Table 10-4 Values for distance "x"

Gearbox type	Distance "x" in mounting position M6	Oil hole position	
	mm		
FD / FDF 39	35_{-0}	2	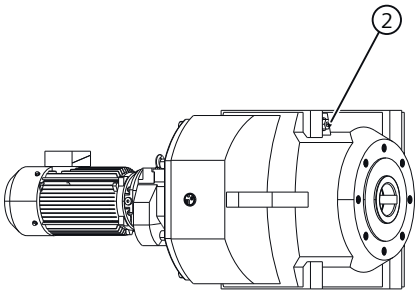
FD / FDF 49	50_{-8}	2	
FD / FDF 69	54_{-9}	2	
FD / FDF 79	65_{-10}	2	
FD / FDF 89	81_{-15}	2	
FD / FDF 109	105_{-15}	2	
FD / FDF 129	133_{-20}	2	
FD / FDF 149	139_{-20}	2	
FD / FDF 169	177_{-30}	2	
FD / FDF 189	224_{-30}	2	

10.3.5 Checking the oil level using the oil sight glass (optional)

If there is an oil sight glass to check the oil level ①, the oil must be visible in the center of the sight glass when the oil is cool. When the oil is hot, the oil level ① is above the center of the sight glass. The oil level ① of cold oil is below the center of the sight glass.

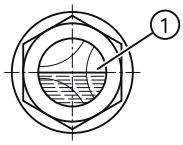

Figure 10-6 Oil level in the oil sight glass

Correct the oil level ① and check it again.

10.3.6 Checking the oil level using the oil dipstick (optional)

In the M4 mounting position for ZF/EF helical gearboxes, the oil level can be checked with an oil dipstick.

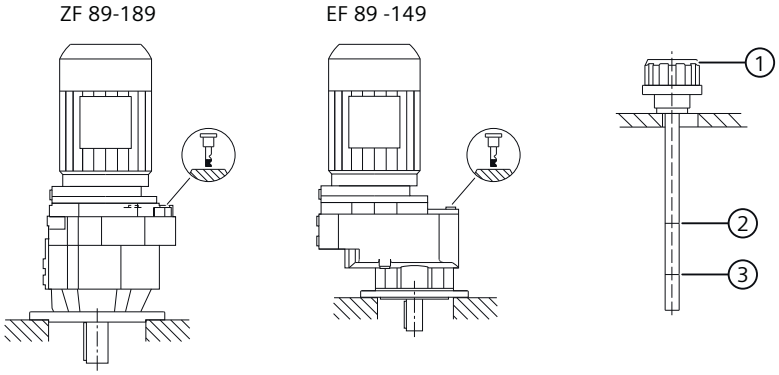

Figure 10-7 Checking the oil level using the oil dipstick

To check the oil level, push the oil dipstick ① into the hole but do not screw it in.

The oil level must be between the lower ② and upper ③ marks on the oil dipstick ①.

After checking, screw the oil dipstick ① in again hand-tight. The oil dipstick ① can remain screwed in during operation.

Correct the oil level and check it again.

10.3.7 Checking the oil quality

Visible signs show effects on the oil. Fresh oil is clear to the eye, and has a typical smell and a specific product color. Clouding or a flocculent appearance indicates water and / or contamination. A dark or black color indicates residue, serious thermal decomposition or contamination.

Follow the symbols in the diagrams of the Mounting positions (Page 139).

Venting

Oil level

Procedure

1. Allow the geared motor to run for a short time. Wear and contaminant particles are visible in the oil shortly after shutting down.
2. Switch off the power supply to the drive unit.
3. Unscrew the sealing element at one of the points marked with the symbols listed above.
4. Remove some oil, using a suction pump and a flexible hose, for example.
5. Check the state of the sealing ring on the sealing element. If required, replace the sealing ring.
6. Seal the gearbox with the sealing element.
7. Check the oil for abnormalities. Change the oil immediately if you determine any abnormalities, as described in Changing the oil (Page 104).

You have now checked the oil quality.

10.3.8 Changing the oil

10.3.8.1 General safety notes for changing the oil

NOTICE

Impermissible mixing of oils leads to damage

An impermissible mixture of oils leads to clouding, deposits, foam, changes to the viscosity or reduced protection against corrosion and wear.

- When changing oil of the same type, the residual volume of oil in the gearbox should be kept as low as possible. Small residual quantities do not cause any problems.
- Do not mix gearbox oils of different types and from different manufacturers.
- Have the manufacturer confirm that the new oil is compatible with the remaining used oil.
- Always flush out the gearbox with the new oil if very different types of oil or oils with very different additives are changed.
- The gearbox must be flushed twice when changing from mineral oil to polyglycol oil (PG) or vice versa. Completely remove the old oil from the gearbox.

NOTICE

Contaminations of the oil impair the lubricity

Do not mix the gearbox oil with other substances.

Do not flush with paraffin or other cleaning agents, as traces of these substances will always remain inside the gearbox.

Note

The oil must be warm because insufficient viscosity caused by oil that is too cold impairs correct emptying.

Operate the gearbox for 15 to 30 minutes to warm it up.

10.3.8.2 Draining the oil

Follow the symbols in the diagrams of the Mounting positions (Page 139).

Venting

Oil level

Oil drain

Procedure

1. Switch off the power supply to the drive unit.
2. Unscrew the vent plug.

3. Place a suitable and sufficiently large receptacle underneath the oil drain plug.
4. Remove the oil drain plug. Drain all the oil into the receptacle.
5. Check the state of the sealing ring on the sealing element. If the sealing ring is damaged, replace the sealing element with a new one.
6. After draining the oil, seal the gearbox immediately using the sealing element.

You have now drained the oil from the gearbox.

10.3.8.3 Flushing the gearbox when changing between incompatible oils

WARNING

Impermissible mixing of oils leads to damage

Residual quantities of original oil can impair the specific properties of the new oil.

A flushing process is required with biodegradable and physiologically safe oils.

The residual corrosion protection oil must amount to no more than 1% of the operating oil volume.

Note

Polyglycol oil has a higher density than mineral oil. Therefore, it sinks down towards the oil drain and the mineral oil floats on top.

This makes the required complete draining of mineral oil from the gearbox extremely difficult.

Note

After the 2nd flush, we recommend that an appropriate analysis institute checks the quality of the flushed fluid.

Follow the symbols in the diagrams of the Mounting positions (Page 139).

Venting

Oil drain

Procedure

1. After the oil has been drained, if possible, remove the rest of the previously used mineral oil using cloths.
2. Unscrew the vent plug.
3. Fill the gearbox with a flushing oil, using a filter (filter mesh max. 25 µm). For the flushing oil, use either the new oil or one that is compatible with the new oil and is less expensive.
4. Operate the gearbox for 15 to 30 minutes under a low load.

5. Place a suitable and large receptacle below the oil drain plug.
6. Remove the oil drain plug. Drain all the oil into the receptacle.
7. After flushing, immediately seal the gearbox using the sealing element.
8. Repeat this step for the 2nd flushing.

You have flushed the gearbox twice. Fill the gearbox with new oil.

10.3.8.4 Filling in oil

NOTICE
Mixing of different oils impairs the lubricity When adding oil, use the same oil type and viscosity. More detailed information on changing incompatible oils is provided in Chapter Flushing the gearbox (Page 105).

Follow the symbols in the diagrams of the Mounting positions (Page 139).

Venting

Procedure

1. Unscrew the vent plug.
2. Fill the gearbox with fresh oil. Use a filler filter with mesh of max. 25 µm.
3. Check the oil level.
4. Correct the oil level and check it again.
5. Check the state of the sealing ring on the sealing element. If the sealing ring is damaged, replace the sealing element with a new one.
6. After filling with oil, seal the gearbox immediately using the sealing element.

You have now filled up the gearbox with oil.

10.3.9 Topping up with oil

If the mounting position of the gearbox is changed or oil lost because of leakage, check the oil level. If you notice oil escaping, locate the leak, and seal the affected area. Top up and check the oil level.

At the time of going to print, the following types of oil are being used when the gearbox is filled for the first time:

CLP ISO VG220: Fuchs Renolin CLP220

CLP ISO PG VG220: Fuchs Renolin PG220

CLP ISO PG VG460: Fuchs Renolin PG460

CLP ISO PAO VG68: Fuchs Renolin Unisyn XT68

CLP ISO PAO VG220: Fuchs Renolin Unisyn XT220

CLP ISO PAO VG460: Fuchs Renolin Unisyn CLP460

CLP ISO E VG220: Fuchs Plantogear S220

CLP ISO H1 VG100: Klüber Klübersynth UH1 6 100

CLP ISO H1 VG460: Castrol Optileb GT 1800/460

If, following agreement, the gearbox is filled at the factory with special lubricant for the special applications referred to above, the lubricant must be shown on the rating plate.

10.3.10 Change the roller bearing grease

The roller bearings are lubricated in the factory with the greases listed in the table.

Renew the grease quantify for grease-lubricated bearings with each oil change.

Clean the bearing before filling the bearing with fresh lubricant.

In the case of bearings on the output shaft or intermediate shafts, the grease quantity must fill 2/3, and in the case of bearings on the input side, 1/3 of the hollow space between the rolling elements.

Table 10-5 Roller-bearing and shaft-sealing-ring grease

Fields of application	Ambient temperature	Manufacturer	Type
Standard	-40 °C to +80 °C	Klüber Fuchs	Petamo GHY 133 N Renolit CX-Tom 15[1)]
Foodstuff-compatible for the food industry	-30 °C to +60 °C	Bremer & Leguil	Cassida Grease GTS 2
Biologically degradable, for agriculture, forestry and the water industry	-35 °C to +60 °C	Fuchs	Plantogel 2 S
[1)] Rolling-bearing grease based on a semi-synthetic base oil.			

10.3.11 Service life of the lubricants

Note

In case of ambient conditions deviating from normal conditions, e.g. high ambient temperatures, high relative humidity, aggressive ambient media, the intervals between changes should be shorter. In such cases, contact Technical Support for assistance in determining the individual lubricant change interval.

Note

Oil sump temperatures above +80 °C can reduce service life. A temperature increase by 10 K halves the service life by the amount as shown in the figure titled "Guide values for oil change intervals".

For a +80 °C oil sump temperature, the following service life can be expected when observing the properties specified by Innomotics:

Table 10-6 Service life of the oils

Oil grade	Service life
Mineral oil	10 000 operating hours or 2 years
Biodegradable oil	
Physiologically safe oil according to USDA-H1/-H2	
Synthetic oil	20 000 operating hours or 4 years

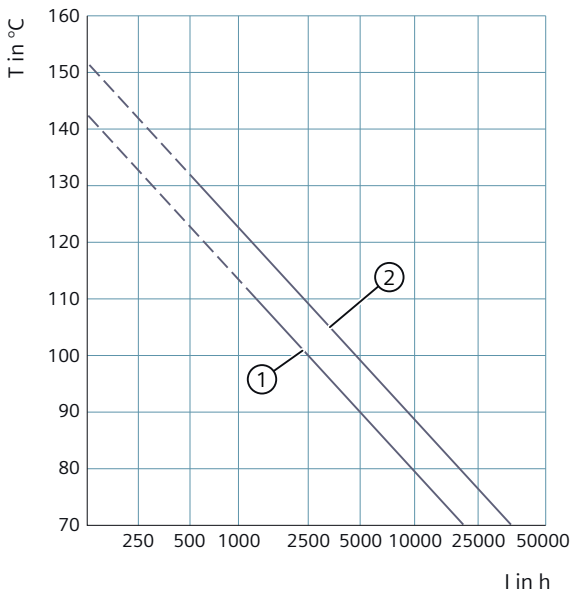

① Mineral oil
② Synthetic oil
T Oil bath steady-state temperature in °C
I Oil change interval in operating hours in h

Figure 10-8 Guide values for oil change intervals

Grease service life of roller bearing greases

The rolling bearings and the clearance in front are filled with grease.

Under approved operating conditions and ambient temperatures, no regreasing is required.

When changing the oil or when changing the shaft sealing rings, also renew the grease in the bearing.

10.3.12 Recommended lubricants

The released and recommended lubricants are listed in table NT 7300 in the Innomotics Download Center (https://www.innomotics.com/hub/en/search/entrypages/productinformation).

⚠ DANGER

Used lubricants only have conditional approval

The used lubricants are not or only conditionally approved for use in the foodstuff or pharmaceutical industry.

Use only lubricants with USDA (United States Department of Agriculture) H1 / H2 approval for deployment in the foodstuff or pharmaceutical industry.

NOTICE

Incorrect operating temperatures impair lubricity of the gearbox oil

Operating temperatures outside the permitted range impair the lubricating property of the gearbox oil.

Carefully comply with the permissible oil sump temperatures listed in the lubricant table.

The oil used must be approved for use in the ambient temperature range given on the rating plate.

When changing the oil, comply with the operating temperature range of the new oil as specified by the oil manufacturer.

Note

As standard, the lubricants and shaft seals are matched with each other corresponding to the prevailing operating conditions.

Contact Technical Support for:

- Change of the operating conditions
- Change in oil grade
- Deployment of new shaft seals.

Note

The lubricants used are not at all or only conditionally biodegradable. If biologically degradable lubricants are required, use only gearbox lubricants with the appropriate classification listed in the NT 7300 table.

Note

Innomotics recommends the use of CLP ISO PG oils for gearboxes of sizes 169 and 189 with a service factor f_B<1.2.

Note

These recommendations are not a guarantee of the lubricant quality provided by your supplier. All lubricant manufacturers are responsible for the quality of their own products.

The oil viscosity is decisive for the oil selection (ISO VG class). The viscosity is specified on the rating plate of the gearbox. The viscosity class indicated applies for the contractually agreed operating conditions.

In the case of different operating conditions, contact Technical Support.

If, following agreement, the gearbox is filled at the factory with special lubricant for the special applications referred to above, the lubricant is shown on the rating plate.

The oil quality must meet the gearbox lubricant requirements specified in the NT 7300 table. The Innomotics warranty is otherwise null and void. We recommend the use of one of these gearbox lubricants. These gearbox oils are subject to constant testing and meet the specified requirements. The recommended oils are possibly removed or replaced by oils that have been further developed at a later point in time. Check that the selected lubricating oil is still recommended by Innomotics. Otherwise change the product.

Operating range	**Oil grade designation according to DIN 51502**	**Permissible oil sump temperature range during operation in °C**	**Ambient temperature in °C**				
Helical gearbox E / Z / D, parallel shaft gearbox F and bevel gearbox K			-15 ...+40	-20 ...+40	-25 ...+40	-30 ...+40	-40 ...+40
Standard	CLP ISO VG220	-15 ... +80	✓	-	-	-	-
	CLP ISO PAO VG220	-30 ... +100	✓	✓	✓	✓	✓1)
	CLP ISO PAO VG68	-40 ... +60	-	-	✓	✓	✓
	CLP ISO PG VG460	-25 ... +110	✓	✓	✓	-	-
	CLP ISO PG VG220	-25 ... +110	✓	✓	✓	-	-
Food sector (USDA) NSF-H1	CLP ISO H1 VG460	-25 ... +100	✓	✓	✓	-	-
	CLP ISO H1 VG100	-30 ... +90	✓	✓	✓	✓	-
Biodegradable oil	CLP ISO E VG220	-20 ... +100	✓	✓	-	-	-
Helical gearbox E / Z / D, parallel shaft gearbox F and bevel gearbox K			-20 ...+45	-20 ...+50	-20 ...+60		
Standard	CLP ISO VG220	-15 ... +80	-	-	-		
	CLP ISO PAO VG220	-30 ... +100	✓	✓	✓		
	CLP ISO PAO VG68	-40 ... +60	-	-	-		
	CLP ISO PG VG460	-25 ... +110	✓	✓	✓		
	CLP ISO PG VG220	-25 ... +110	✓	✓	✓		
Food sector (USDA) NSF-H1	CLP ISO H1 VG460	-25 ... +100	✓	✓	✓		
	CLP ISO H1 VG100	-30 ... +90	✓	✓	✓		
Biodegradable oil	CLP ISO E VG220	-20 ... +100	✓	✓	✓		

Operating range	Oil grade designation according to DIN 51502	Permissible oil sump temperature range during operation in °C	Ambient temperature in °C				
Helical worm gearbox C, bevel gearbox B			-20 ...+40	-25 ...+40	-30 ...+40	-40 ...+40	
Standard	CLP ISO PG VG220	-25 ... +110	✓	✓	-	-	
	CLP ISO PAO VG460	-25 ... +110	✓	✓	-	-	
	CLP ISO PAO VG220	-30 ... +100	✓	✓	✓	✓1)	
	CLP ISO PAO VG68	-40 ... +60	-	✓	✓	✓	
	CLP ISO PG VG460	-25 ... +110	✓	✓	-	-	
Food sector (USDA) NSF-H1	CLP ISO H1 VG460	-25 ... +100	✓	✓	-	-	
	CLP ISO H1 VG100	-30 ... +90	✓	✓	-	-	
Helical worm gearbox C, bevel gearbox B			-20 ...+45	-20 ...+50	-20 ...+60		
Standard	CLP ISO PG VG220	-25 ... +110	✓	✓	✓		
	CLP ISO PAO VG460	-25 ... +110	✓	✓	✓		
	CLP ISO PAO VG220	-30 ... +100	✓	✓	✓		
	CLP ISO PAO VG68	-40 ... +60	-	-	-		
	CLP ISO PG VG460	-25 ... +110	✓	✓	✓		
Food sector (USDA) NSF-H1	CLP ISO H1 VG460	-25 ... +100	✓	✓	✓		
	CLP ISO H1 VG100	-30 ... +90	✓	✓	✓		

1) To ensure optimum lubricating properties, Innomotics recommends that the drive is preheated to an operating temperature of at least -30 °C.

CLP = mineral oil

CLP PG = polyglycol oil

E = ester oil, organic oil (bio oil / risk of water pollution, class WGK1)

PAO = poly-alpha-olefin oil

CLP H1 = physiologically safe oil (USDA-H1 approval)

10.4 Lubrication of the XLplus and VLplus heavy-duty bearing systems

The output-side bearing is greased depending on the frame size. Initial greasing has already been carried out.

In normal operating conditions and with low load levels, the lubrication is 25 000 to 30 000 operating hours.

For higher loads due to speed and / or temperature, schedule regreasing at shorter intervals.

Regreasing intervals

Note

The relubrication interval of the bearing depends on the temperature and the load

For temperatures above +70° C, the regreasing interval must be reduced by half for each temperature increase of 15 K.

For moderate shock loading and vibration, the regreasing interval must be reduced by 20%.

For heavy loading, the regreasing interval must be reduced by half.

The regreasing interval is valid for a temperature of +70° C, measured on the surface of the housing in the vicinity of the bearing.

Regrease the bearing after the following number of operating hours.

Table 10-7 Regreasing interval in operating hours [h]

Output speed n_2	**Operating hours for size**				
	89	**109**	**129**	**149**	**169**
r/min	**h**				
≤ 30	29000	29000	29000	29000	18000
31 ... 50	29000	18000	18000	14000	14000
51 ... 100	14000	12000	12000	10000	9000
101 ... 150	10000	10000	9000	9000	7000
151 ... 250	9000	7000	7000	5000	5000
251 ... 400	7000	5000	5000	4000	4000

Rolling bearing grease

NOTICE

Impermissible mixing of rolling bearing greases results in damage

Residual quantities of original oil can impair the specific properties of the new oil.

When regreasing, do not mix greases with a different soap base.

Use the recommended rolling bearing grease when relubricating the bearings.

Using a grease gun, inject the grease into the bearing point via the lubricating nipples provided.

The grease quantities listed in the table are guide values.

Table 10-8 Grease quantity [g] for relubrication

Regreasing interval	Grease quantity for size				
	89	109	129	149	169
	g				
After 6 months	10	10	20	20	30
After several years without operation	28	33	46	68	95

Maintenance of the output-side bearing

Note

Change the grease filling of the rolling bearing when you change the gear oil.

Use the recommended rolling bearing grease when filling the bearings with new grease.

Procedure

1. Dismantle the output-side bearing unit.
2. Clean the bearing.
3. Fill the bearing with the new grease up to 30 % of the free bearing chamber.
4. Reassemble the bearing unit.

You have relubricated the bearing unit.

Maintenance interval after regreasing

After regreasing, the maintenance interval can be increased to the following number of operating hours.

Table 10-9 Maintenance interval in operating hours [h] for relubrication

Output speed n_2	Operating hours for size				
	89	109	129	149	169
r/min	h				
≤ 30	80000	80000	80000	80000	50000
31 ... 50	80000	50000	50000	40000	40000
51 ... 100	40000	32000	32000	28000	25000
101 ... 150	28000	28000	25000	25000	20000
151 ... 250	25000	20000	20000	15000	15000
251 ... 400	20000	15000	15000	10000	10000

10.5 Replace bearings

The bearing service life is finite, greatly depends on the operating conditions and therefore cannot be calculated reliably. In the operating conditions specified by the operator, bearing life can be calculated. Changes in vibration and noise pattern are an indication that an immediate bearing replacement is necessary.

10.6 Checking the gearbox for leaks

Note

Service life of the shaft sealing rings

Shaft sealing rings are subject to natural wear. The service life depends on the operating conditions.

Include the shaft sealing rings in periodic maintenance and service work carried out on the system.

Note

Due to the inherent principle of operation, oil mist escapes from a breather valve or labyrinth seal.

Oil or grease escaping in small quantities from the shaft sealing ring should be regarded as normal during the run-in period of 24 hours operating time.

Avoid consequential damage. Replace the shaft sealing ring if the leakage quantities are significant or leaking continues after the run-in period.

Table 10-10 Description and measures

Status	Description	Measures	Notes
Film of moisture on the shaft sealing ring	Film of moisture as a result of the inherent principle of operation (apparent leakage)	Remove using a clean cloth and continue to observe.	No active fault. The sealing ring usually dries off during further operation.
Leakage at the shaft sealing ring	Identifiable small trickle, formation of drops, also after the running-in phase	Replace the sealing ring, determine the possible cause of the sealing ring failure and rectify.	During the run-in period, the shaft sealing ring beds into the shaft. A visible track can be seen on the shaft. Optimum preconditions for a perfect seal are obtained after the run-in period.

10.7 Replacing the vent valve

To ensure correct functioning, renew the breather valve yearly.

When replacing, prevent dirt and damaging atmospheres from entering the gearbox.

If too much oil is contained in the gearbox, oil will escape from the breather valve. Correct the oil quantity and replace the breather valve.

10.8 Checking the oil level sensor (optional)

The oil level sensor indicates the oil level only when the gearbox is shut down.

Reduce the oil level Add oil until the oil level sensor outputs a switching signal.

Comply with the separate operating instructions for the oil level sensor.

10.9 Cleaning gearbox and motor

Ex-version of gearbox and geared motor

When cleaning the gearbox, do not use any processes or materials that generate an electrostatic charging on the surface of the gearbox.

To avoid electrostatic charging, clean the surface of the geared motors using a damp cloth.

WARNING

Explosion hazard due to overheating of the machine caused by a layer of dust

Deposits of dust have a thermally insulating effect, causing the machine to overheat. The maximum surface temperature of the machine is not adhered to. The dust is ignited as a result, causing an explosion. Death, serious injury and material damage will result.

- Regularly remove dust from the machine.
- Do not allow dust layers thicker than 5 mm to build up.
- Switch the machine on when the dust has been removed.

NOTICE

Dust deposits cause higher housing temperatures

Dust deposits prevent heat radiation.

Keep the geared motor free from any dirt and dust.

NOTICE

Cleaning with a high-pressure cleaning appliance

Water penetrates the geared motor. Seals are damaged.

Do not use high-pressure cleaning equipment to clean the geared motor.

Do not use tools with sharp edges.

De-energize the drive unit and bring it into a no-voltage condition when cleaning the drive unit.

10.10 Checking tightness of fastening bolts

Ex-version of gearbox and geared motor
Loose parts can cause sparks through impact.
Ingress of foreign bodies results in the generation of sparks.

Note

Replace damaged headless screws with new screws of the same type and property class.

Switch off the power supply to the drive unit. Check all fastening bolts for tightness using a torque wrench.

10.11 Thread sizes and tightening torques for fixing screws

The general tolerance for the tightening torque is 10 %. The tightening torque is based on a friction coefficient of μ = 0.14.

Table 10-11 Tightening torques for fixing screws

Thread size	Tightening torque for property class		
	8.8	10.9	12.9
	Nm	Nm	Nm
M4	3	4	5
M5	6	9	10
M6	10	15	18
M8	25	35	41
M10	50	70	85
M12	90	120	145
M16	210	295	355
M20	450	580	690
M24	750	1 000	1 200
M30	1 500	2 000	2 400
M36	2 500	3 600	4 200

10.12 Inspecting the gearbox

Carry out a scheduled inspection of the gearbox once a year in accordance with the possible criteria listed in Chapter General notes about maintenance work (Page 91).

Check the gearbox regarding the criteria described in Chapter Specific safety instructions (Page 27) .

Touch up damaged paint finish carefully and professionally.

10.13 Replacing the hose of the oil expansion unit

NOTICE
Hose with leaks The hose of the oil expansion unit is subject to natural wear. The service life depends on the operating conditions. Check the hose regularly for tears or leaks. Renew the hose every 4 years at the latest.

Disposal 11

Recycling and disposal of geared motors

For environmentally sustainable recycling and disposal of your discarded device, please contact a company certified for the disposal of electronic waste. Dispose of the device in accordance with the regulations valid in your country.

WARNING

Incorrect disposal of used oil

Incorrect disposal of used oil is a threat to the environment and health.

After use, oil must be taken to a used oil collection point. Adding foreign substances such as solvents, brake and cooling fluid is prohibited.

Avoid longer periods of contact with the skin.

Empty the used oil from the gearbox. The used oil must be professionally collected, stored, transported and disposed of. Do not mix polyglycols with mineral oil. Dispose of polyglycols separately.

Strictly observe country-specific rules and regulations. Under German law, to allow optimal treatment of the oil (§ 4 VI Used Oil), oils with different disposal codes must not be mixed with one another.

Collect and dispose of used oil in accordance with regulations.

Immediately remove any spilt oil with an oil-binding agent.

Dispose of the housing parts, gears, shafts, and rolling bearings of the geared motor as scrap metal.

Dispose of packaging material in accordance with regulations.

Table 11-1 Disposal codes for gear oils

Oil grade	Designation	Disposal code
Mineral oil	CLP ISO VG220	13 02 05
Polyglycols	CLP ISO PG VG220, CLP ISO PG VG460, CLP ISO H1 VG100, CLP ISO H1 VG460	13 02 08
Poly-Alpha-Olefines	CLP ISO PAO VG68, CLP ISO PAO VG220, CLP ISO PAO VG460	13 02 06
Biologically degradable oils	CLP ISO E VG220	13 02 07

Technical data

12

12.1 Type designation

Table 12-1 Example of the article number structure

Innomotics gearbox	Article number position				
	1	**2**	**3**	**4**	**5**
Helical gearbox E	2	K	J	3	0
Helical gearbox Z	2	K	J	3	1
Helical gearbox D	2	K	J	3	2
Parallel shaft gearbox FZ	2	K	J	3	3
Parallel shaft gearbox FD	2	K	J	3	4
Bevel gearbox B, K	2	K	J	3	5
Helical worm gearbox C	2	K	J	3	6
Worm gearbox or worm geared motor S	2	K	J	3	7

Table 12-2 Example of the type designation structure

Example:	**Main gearbox**				**Intermediate helical gearbox**		**Input unit**		**Ex mark-ing**
	F	**D**	**F**	**89**	**- Z**	**39**	**- K4**	**(100)**	**- 1**
Gearbox type	F								
Stage		D							
Type			F						
Size				89					
Development status				-					
Stage					Z				
Size						39			
Input unit							K4		
(for motor size)								(100)	
Ex marking									1

Table 12-3 Type designation code

Gearbox type	
(-)	Helical gearbox
F	Parallel shaft gearbox
B	Bevel gearbox, two-stage
K	Bevel gearbox, three-stage

C		Helical worm gearbox
S		Worm gearbox or worm geared motor
Stage		
(-)		
E		Single-stage
Z		Two-stage
D		Three-stage
Type		
	Shaft	
	(-)	Solid shaft
	A	Hollow shaft
	E	Plug-in shaft
	Fixing	
	(-)	Foot-mounted design
	B	Foot / flange-mounted version
	F	Flange-mounted design (A type)
	Z	Housing flange (C type)
	D	Torque arm
	G	Flange (A type) opposite output shaft
	Connection	
	(-)	Feather key
	S	Shrink disk
	T	Hollow shaft with splines
	R	ShaftMount assembly system
	Special features	
	W	Reduced-backlash version
Intermediate helical gearbox - transmission stage		
	Z	Two-stage
	D	Three-stage
Input unit		
KU		Short adapter with flexible coupling for fitting an IEC motor
K2		Coupling adapter with flexible coupling for fitting an IEC motor
K3		Coupling adapter with flexible coupling for mounting a NEMA motor
K4		Short adapter with plug-in connection for fitting an IEC motor
K5		Short adapter with plug-in connection for mounting a NEMA motor
KS		Coupling adapter only for mounting a SIEMENS SIMOTICS S-1FK7/-1FT7, SIMOTICS M-1PH8, SIMOTICS S-1FK2, SIMOTICS S-1FL6 servomotor
KQ(S)		Coupling adapter for mounting a SIMOTICS S-1FK7/-1FT7 servomotor
K8		Coupling adapter for mounting a SIMOTICS M-1PH8 servomotor
A		Adapter with free input shaft
Ex marking		
-		No Ex version
1		Ex version

Combinations of motor and gearbox with adapter are identified by the following Article Nos.

Part number	Description
T1A01xxxxxxxxx	SIMOTICS S-1FK2 with Innomotics gearbox
T1A02xxxxxxxxx	SIMOTICS S-1FK7 with Innomotics gearbox
T1A03xxxxxxxxx	SIMOTICS S-1FT7 with Innomotics gearbox
T1A04xxxxxxxxx	SIMOTICS M-1PH8 with Innomotics gearbox
T1A05xxxxxxxxx	Innomotics GP 1LE1 with Innomotics gearbox
T1A06xxxxxxxxx	Innomotics XP 1MB1 with Innomotics gearbox
T1A10xxxxxxxxx	Drive train 1FK2, 1FK7, 1FT7, 1PH8, 1LE1, 1MB1 special with quotation (option Y92)

12.2 Serial number coding

Code examples	Description
FDUN3/256077005	Serial number
FDU	Country code
N3	Year and month in the YM format according to DIN EN 60062 (in the example, 2021 March)
2560770	Production order
05	Position of the series

12.3 QR code on the rating plates

The QR code on the rating plate establishes a link to the Innomotics portal with product-related information and documentation.

Further, you can order your product-related spare parts through Spares on Web (SoW). The button to SoW is displayed if you have logged into the portal.

12.4 Rating plate data

12.4.1 General technical data

⚠ WARNING

Exceeding the power limits

Exceeding the power limits (max. speeds, max. torque etc.) of the gearbox or motor can damage the geared motor.

Maintain the permissible operating ranges and power limits of the motor and gearbox.

The max. speeds and torque shown indicate the mechanical limits of the geared motor. Depending on the application, also take into account thermal limits. In applications with long max. speed components, high pressure build-up may occur in the gearbox, which can cause damage to the gearbox (e.g. leakage).

The most important technical data appears on the rating plate of the gearboxes and geared motors.

This data, together with the contractual agreements for the geared motors, determines the limits of intended use.

In the case of geared motors, a rating plate attached to the motor indicates the data for the entire drive.

In certain cases separate rating plates are attached to the gearbox and the motor. Maintain the operating ranges and power limits on all rating plates.

The degree of protection according to EN 60034-5 (IEC 60034-5) specified on the nameplates only applies to the motor of the unit.

When selecting higher degrees of protection, also take into consideration the equipping on the gearbox side (seals, vents).

12.4.2 Gearbox rating plate

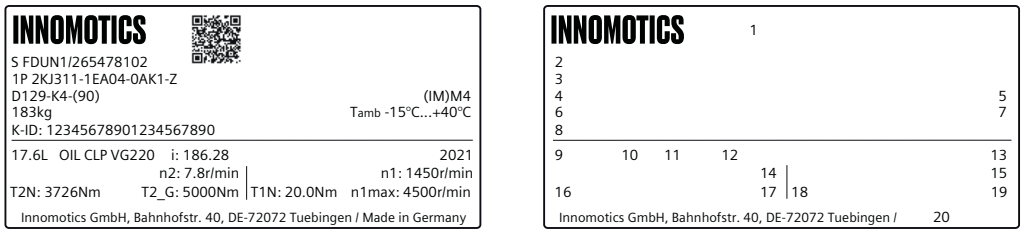

Figure 12-1 Example of a gearbox rating plate

1 QR code
2 Serial number
3 Article number

4 Type designation
5 Mounting position
6 Weight *m* in kg
7 Ambient temperature
8 Customer ID
9 Oil quantity in l, main gearbox / intermediate gearbox
10 Oil grade
11 Oil viscosity ISO VG class according to DIN 51519 / ISO 3448
12 Total transmission ratio i
13 Year of manufacture
14 Gear output speed n_2 in r/min
15 Reference input speeds n_1 in r/min
16 Maximum permissible output torque of the gearbox/adapter combination for continuous duty T_{2N} in Nm
17 Maximum permissible output torque of the gearbox without adapter unit for continuous duty T_{2_G} in Nm
18 Maximum permissible input torque of the gearbox/adapter combination for continuous duty T_{1N} in Nm
19 Maximum permissible short-term input speed n_{1max} in min^{-1}
20 Country of origin

12.4.3 Converter world motor rating plate

2 operating points as well as the usual certificates and the energy efficiency class are stamped on the rating plate of the converter world motor. The motor is only suitable for converter operation.

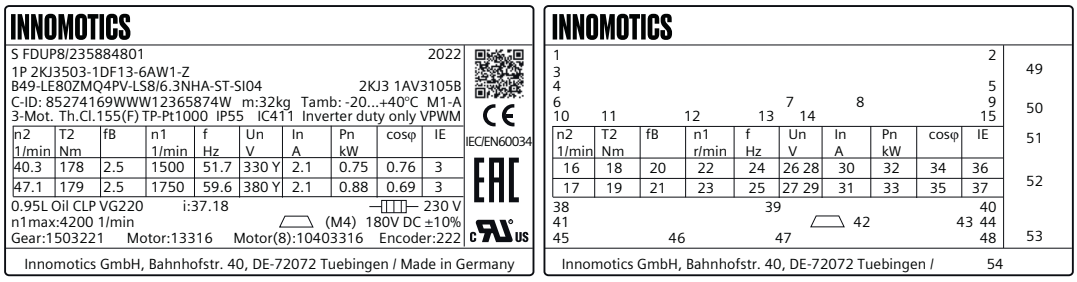

Figure 12-2 Example of a converter world motor rating plate

1 Article number
2 Year of manufacture
3 Serial number
4 Type designation (with marking for a brake and/or encoder if available)
5 Geared motor type
6 Customer-specific data
7 Weight m in kg

8	Ambient temperature
9	Geared motor mounting position
10	Phase number and type of current for the motor
11	Temperature class Th. Cl.
12	Thermal motor protection
13	Degree of protection acc. to IEC 60034-5
14	Ventilation type acc. to IEC 60034-5
15	Motor operating mode according to IEC 60034
16	Gearbox output speed n_2 in r/min for the 1st rated operating point
17	Gearbox output speed n_2 in r/min for the 2nd rated operating point
18	Geared motor output torque T_2 in Nm for the 1st rated operating point
19	Geared motor output torque T_2 in Nm for the 2nd rated operating point
20	Service factor f_B for the 1st rated operating point
21	Service factor f_B for the 2nd rated operating point
22	Rated speed n_1 in r/min for the 1st point
23	Rated speed n_1 in r/min for the 2nd point
24	Rated frequency f_1 in Hz for the 1st point
25	Rated frequency f_1 in Hz for the 2nd point
26	Rated voltage U_n in V for the 1st point
27	Rated voltage U_n in V for the 2nd point
28	Circuit, circuit symbols according to DIN EN 60617 Part 6 / IEC 60617-6 for the 1st point
29	Circuit, circuit symbols according to DIN EN 60617 Part 6 / IEC 60617-6 for the 1st point
30	Rated current I_N in A for the 1st point
31	Rated current I_N in A for the 2nd point
32	Rated power P_N in kW for the 1st point
33	Rated power P_N in kW for the 2nd point
34	Power factor cosφ for the 1st rated operating point
35	Power factor cosφ for the 2nd rated operating point
36	Efficiency class according to IEC TS 60034-30-2 for the 1st rated operating point
37	Efficiency class according to IEC TS 60034-30-2 for the 2nd rated operating point
38	Oil quantity in l for the main gearbox/intermediate gearbox, oil type, oil viscosity ISO VG class according to DIN 51519 / ISO 3448
39	Total transmission ratio i
40	Anti-condensation heating
41	Maximum permissible speed of the motor in r/min
42	M4 rated braking torque T_{br} in Nm
43	Brake supply voltage U in V
44	Duty ratio (CDF = cyclic duration factor)
45	Gearbox code for SINAMICS converters
46	Motor code for 2nd Generation SINAMICS converters
47	Motor code for 3rd Generation SINAMICS converters

48 Encoder code for SINAMICS converters
49 QR code
50 CE marking
51 Underlying standard
52 EAC marking
53 Recognized Component test symbol for Canada and the US
54 Country of origin

12.4.4 Rating plate of geared motors without a UL/CSA version

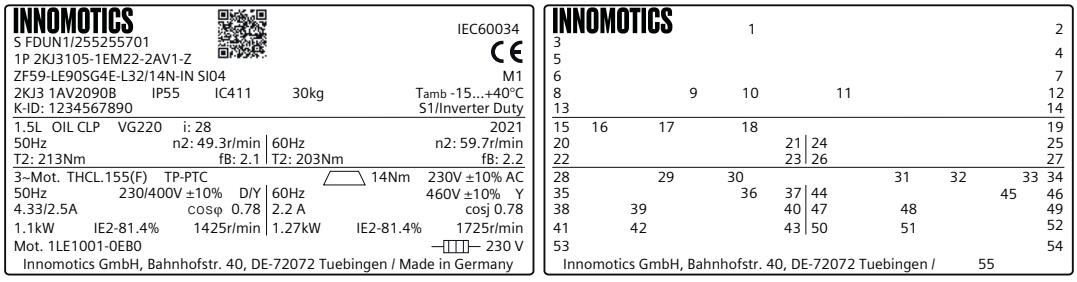

Figure 12-3 Example of a rating plate for geared motors without UL-CSA

1 QR code
2 Underlying standard
3 Serial number
4 CE marking or other marking, if required
5 Article number
6 Type designation with marking of the (functionally safe) rotary encoder
7 Mounting position
8 Geared motor type
9 Degree of protection acc. to IEC 60034-5
10 Ventilation type acc. to IEC 60034-6
11 Weight *m* in kg
12 Ambient temperature
13 Customer ID
14 Motor operating mode
15 Oil quantity in l, main gearbox / intermediate gearbox
16 Oil grade
17 Oil viscosity ISO VG class according to DIN 51519 / ISO 3448
18 Total transmission ratio i
19 Year of manufacture

Frequency 1

20 Rated frequency *f* in Hz
21 Gearbox output speed n_2 in rpm

22 Geared motor output torque T_2 in Nm
23 Service factor f_B

Frequency 2

24 Rated frequency *f* in Hz
25 Gearbox output speed n_2 in rpm
26 Geared motor output torque T_2 in Nm
27 Service factor f_B

Motor and brake data

28 Phase number and type of current for the motor
29 Temperature class Th. Cl.
30 Thermal motor protection
31 Symbols (IEC 60617-2): ⏢ = brake
32 Rated braking torque T_{Br} in Nm
33 Brake supply voltage *U* in V
34 Duty ratio (CDF = cyclic duration factor)

Frequency 1

35 Rated frequency *f* in Hz
36 Rated voltage / range *U* in V
37 Circuit, circuit symbols according to DIN EN 60617 Part 6 / IEC 60617-6
38 Rated current I_N in A
39 Operating mode for motor and brake (if ≠ S1)
40 Power factor cos φ
41 Rated power P_N in kW
42 For induction motors: Efficiency class marking according to IEC 60034-30 with efficiency data
For synchronous-reluctance motors/VSD 4000: Efficiency class marking according to IEC TS 60034-30-2 without efficiency data
43 Rated speed n_N in rpm

Frequency 2

44 Rated frequency *f* in Hz
45 Rated voltage / range *U* in V
46 Circuit, circuit symbols according to DIN EN 60617 Part 6 / IEC 60617-6
47 Rated current I_N in A
48 Operating mode for motor and brake (if ≠ S1)
49 Power factor cos φ
50 Rated power P_N in kW
51 Efficiency class marking according to IEC 60034-30
52 Rated speed n_N in rpm
53 Motor designation
54 Anti-condensation heating
55 Country of origin

12.4.5 Rating plate of geared motors with a UL/CSA version

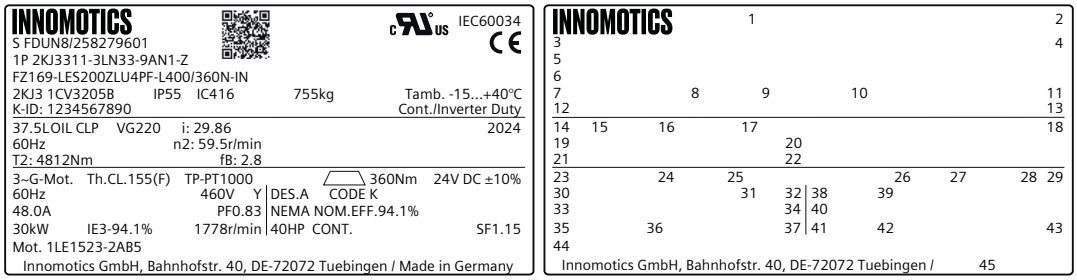

Figure 12-4 Example of a rating plate for geared motors with UL-CSA

1 QR code
2 Underlying standard
3 Serial number
4 CE marking or other marking, if required
5 Article number
6 Type designation with marking of the (functionally safe) rotary encoder
7 Geared motor type
8 Degree of protection acc. to IEC 60034-5
9 Ventilation type acc. to IEC 60034-6
10 Weight *m* in kg
11 Ambient temperature
12 Customer ID
13 Motor operating mode according to UL
14 Oil quantity in l, main gearbox / intermediate gearbox
15 Oil grade
16 Oil viscosity ISO VG class according to DIN 51519 / ISO 3448
17 Total transmission ratio i
18 Year of manufacture

Frequency 1

19 Rated frequency *f* in Hz
20 Gearbox output speed n_2 in rpm
21 Geared motor output torque T_2 in Nm
22 Service factor f_B

Motor and brake data

23 Phase number and type of current for the motor
24 Temperature class Th. Cl.
25 Thermal motor protection
26 Symbols (IEC 60617-2): ⏢ = brake
27 Rated braking torque T_{Br} in Nm
28 Brake supply voltage *U* in V
29 Duty ratio (CDF = cyclic duration factor)

Frequency 1

30 Rated frequency *f* in Hz
31 Rated voltage / range *U* in V
32 Circuit, circuit symbols according to DIN EN 60617 Part 6 / IEC 60617-6
33 Rated current I_N in A
34 Performance factor
35 Rated power P_N in kW
36 For induction motors: Efficiency class marking according to IEC 60034-30 with efficiency data
For synchronous-reluctance motors/VSD 4000: Efficiency class marking according to IEC TS 60034-30-2 without efficiency data
37 Rated speed n_N in rpm
38 Design letter
39 Code letter
40 NEMA energy efficiency
41 Rated power P_N in HP
42 NEMA operating mode
43 Service factor
44 Motor designation
45 Country of origin

12.4.6 Additional plate geared motors for converter operation

The supplementary plate of the geared motor with line motors is suitable for converter operation. Technical data for converter operation at 87 Hz and 104 Hz is stamped on the supplementary plate.

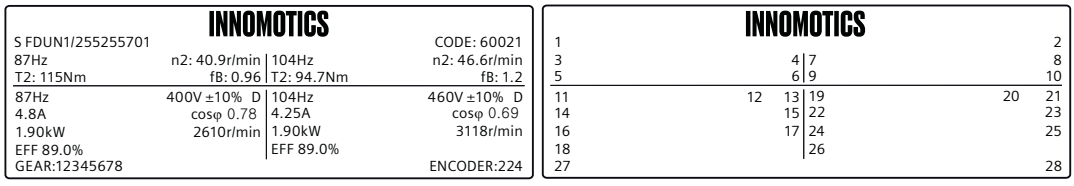

Figure 12-5 Example of an additional rating plate for geared motors for converter operation at 87 Hz and 104 Hz

1 Serial number
2 Motor code

Frequency 1

3 Rated frequency *f* in Hz
4 Gearbox output speed n_2 in rpm
5 Geared motor output torque T_2 in Nm
6 Service factor f_B

Frequency 2

7 Rated frequency *f* in Hz
8 Gearbox output speed n_2 in rpm

9 Geared motor output torque T_2 in Nm
10 Service factor f_B

Motor and brake data

Frequency 1

11 Rated frequency *f* in Hz
12 Rated voltage / range *U* in V
13 Circuit, circuit symbols according to DIN EN 60617 Part 6 / IEC 60617-6
14 Rated current I_N in A
15 Power factor cos φ
16 Rated power P_N in kW
17 Rated speed n_N in rpm
18 Energy efficiency

Frequency 2

19 Rated frequency *f* in Hz
20 Rated voltage / range *U* in V
21 Circuit, circuit symbols according to DIN EN 60617 Part 6 / IEC 60617-6
22 Rated current I_N in A
23 Power factor cos φ
24 Rated power P_N in kW
25 Rated speed n_N in rpm
26 Energy efficiency
27 Gearbox code for SINAMICS converters
28 Encoder code for SINAMICS converters

12.4.7 Identification label for combinations of motors and gearboxes with adapter

12.4.7.1 Combinations with Innomotics 1LE1, 1MB1 and SIMOTICS S-1FK2, S-1FK7, S-1FT7, 1PH8 motors

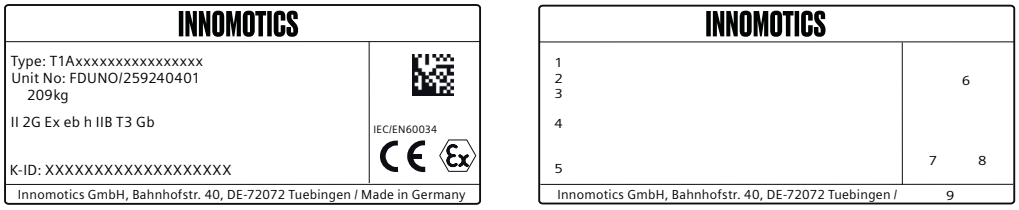

Figure 12-6 Example of an identification label with Innomotics 1LE1, 1MB1 and SIMOTICS 1PH8 motors

1 Technical numbering system for gearbox, adapter and motor combinations
2 Serial number
3 Total weight of gearbox, adapter and motor combinations
4 System marking type of protection

5 Customer-specific data (max. 20 characters)
6 Data matrix code - technical number system + serial number
7 CE marking
8 Ex marking
9 Country of origin

12.4.7.2 Explanation of the motor rating plate data

For the following combinations of gearbox, adapter and motor, follow the operating instructions of the corresponding motor series, which are provided in Chapter General overview (Page 27).

- Gearbox - adapter KS - SIMOTICS S-1FK7
- Gearbox - adapter KS - SIMOTICS S-1FT7
- Gearbox - adapter KS - SIMOTICS S-1FK2
- Gearbox - adapter KS/K8 - SIMOTICS M-1PH8
- Gearbox - adapter K2/K4 - IEC standard motor INNOMOTICS GP 1LE1
- Gearbox - adapter K2/K4 - explosion protected motors Innomotics XP 1MB1

12.4.8 Rating plate of a worm geared motor S

12.4.8.1 Rating plate of a worm gearbox or worm geared motor

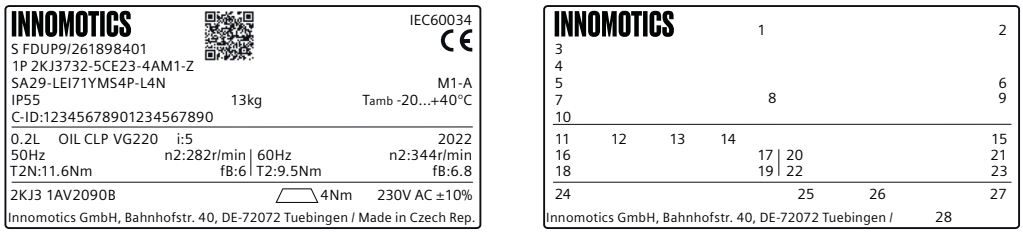

Figure 12-7 Example of a worm geared motor rating plate

1 QR code
2 Underlying standard
3 Serial number
4 Article number
5 Type designation
6 Mounting position
7 Degree of protection acc. to IEC 60034-5
8 Weight *m* in kg
9 Ambient temperature
10 Customer ID
11 Oil quantity in l

12 Oil grade
13 Oil viscosity ISO VG class according to DIN 51519 / ISO 3448
14 Total transmission ratio i
15 Year of manufacture

Frequency 1

16 Rated frequency *f* in Hz
17 Gearbox output speed n_2 in r/min
18 Geared motor output torque T_{2N} in Nm
19 Service factor f_B

Frequency 2

20 Rated frequency *f* in Hz
21 Gearbox output speed n_2 in r/min
22 Geared motor output torque T_2 in Nm
23 Service factor f_B
24 Geared motor type
25 Symbols (IEC 60617-2): ⏢ = brake
26 Rated braking torque T_{Br} in Nm
27 Brake supply voltage *U* in V
28 Country of origin

12.4.8.2 Example of a 1LE motor rating plate

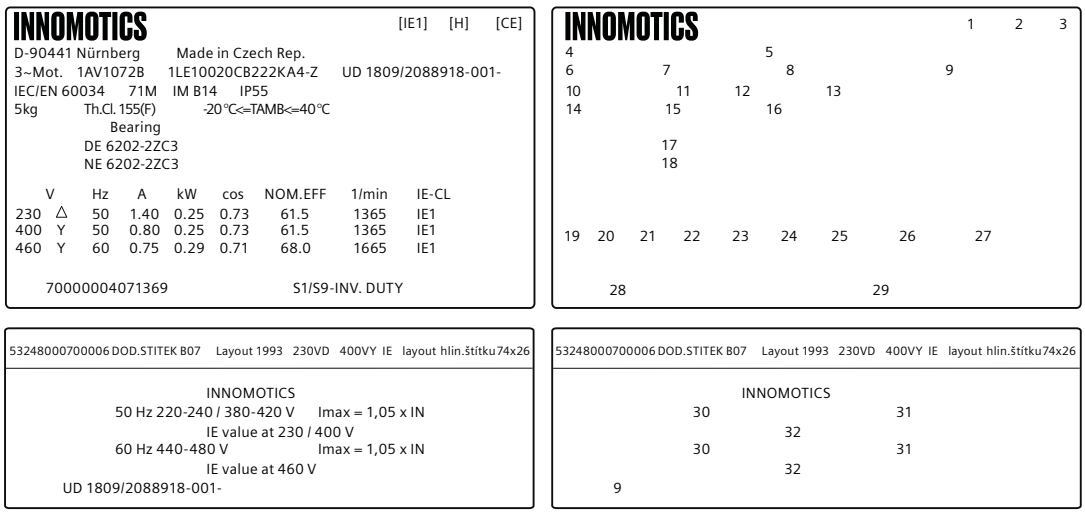

Figure 12-8 Example of a 1LE motor rating plate

1 IE efficiency class
2 Half-key balancing
3 Standards and regulations
4 Headquarters
5 Manufacturer's address

6 Motor type: Three-phase low voltage motor
7 Motor type number (MT)
8 Article number
9 Date of manufacture YYMM / serial number
10 Underlying standard
11 Frame size
12 Type of construction
13 Degree of protection
14 Weight *m* in kg
15 Temperature class Th. Cl.
16 Ambient temperature
17 Bearing size DE
18 Bearing size NDE
19 Rated voltage in V
20 Winding connections
21 Frequency *f* in Hz
22 Rated current I_N in A
23 Rated power P_N in kW
24 Power factor cos φ
25 Efficiency
26 Rated speed n_N in r/min
27 IE efficiency class
28 Material number
29 Duty type
30 Voltage range
31 Maximum current
32 IE value at specified voltage

12.4.8.3 Example of a 1LE motor rating plate with CCC version

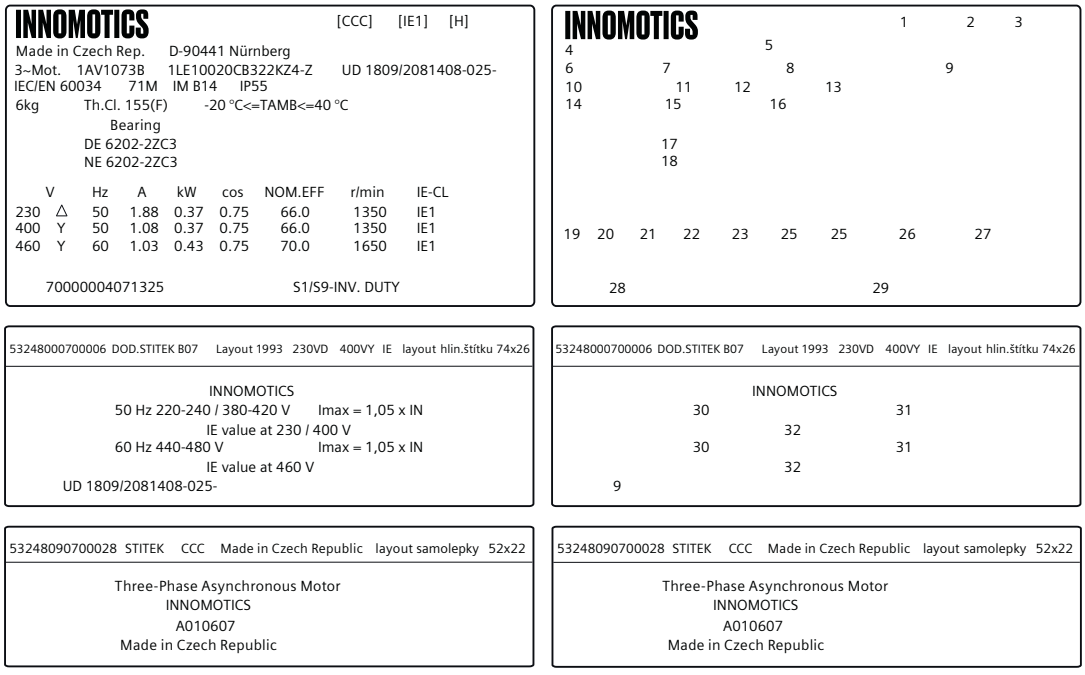

Figure 12-9 Example of a 1LE motor rating plate with CCC version

1 CCC marking
2 IE efficiency class
3 Half-key balancing
4 Headquarters
5 Manufacturer's address
6 Motor type: Three-phase low voltage motor
7 Motor type number (MT)
8 Article number
9 Date of manufacture YYMM / serial number
10 Underlying standard
11 Frame size
12 Type of construction
13 Degree of protection
14 Weight *m* in kg
15 Temperature class
16 Ambient temperature
17 Bearing size DE
18 Bearing size NDE
19 Rated voltage in V
20 Winding connections
21 Frequency *f* in Hz
22 Rated current I_N in A

23 Rated power P_N in kW
24 Power factor cos φ
25 Efficiency
26 Rated speed n_N in r/min
27 IE efficiency class
28 Material number
29 Duty type
30 Voltage range
31 Maximum current
32 IE value at specified voltage

12.4.9 Rating plate for geared motors in Ex version

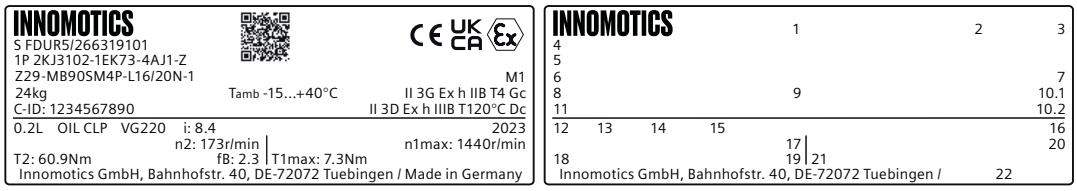

Figure 12-10 Example of a mounted Ex rating plate

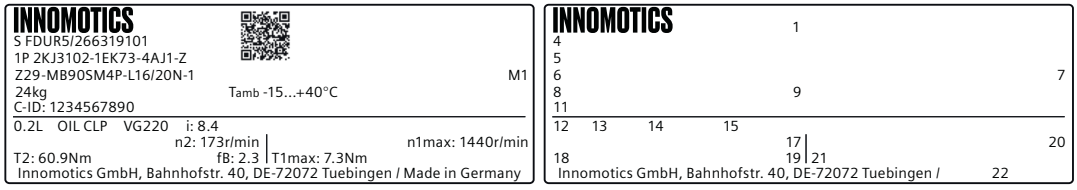

Figure 12-11 Example of a Ex rating plate, supplied loose

1 QR code
2 CE and UKCA marking
3 Ex marking
4 Serial number
5 Article number
6 Type designation
7 Mounting position
8 Weight *m* in kg
9 Ambient temperature
10.1 Gas explosion protection type
10.2 Dust explosion protection type
11 Customer ID
12 Oil quantity in l, main gearbox / intermediate gearbox
13 Oil grade
14 Oil viscosity ISO VG class according to DIN 51519 / ISO 3448

15 Total transmission ratio i
16 Year of manufacture
17 Gearbox output speed n_2 in r/min
18 Configured output torque of the gearbox/adapter combination T_2 in Nm
19 Service factor f_B
20 Configured input speed n_{1max} in r/min
21 Configured input torque of the gearbox/adapter combination T_{1max} in Nm
22 Country of origin

12.4.10 Additional Customer Info Label

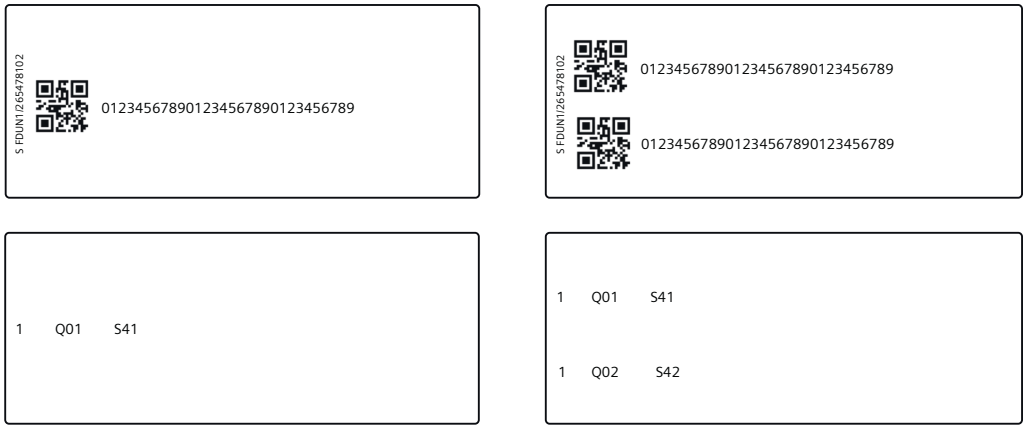

1	Serial number
Q01	QR code that includes variable S41
Q02	QR code that includes variable S42
S41	Customer text, that was transferred via Y85 (standard) or Y87 (metal) from customers, maximum of 30 characters
S42	Customer text, that was transferred via Y86 (standard) from customers, maximum of 30 characters

12.4.11 Product marking UKCA (United Kingdom Conformity Assessed)

The UKCA sign shows the UKCA mark and the company name and address of the importer of the product in the UK.

Figure 12-12 UKCA label

12.4.12 Repair rating plate for Ex

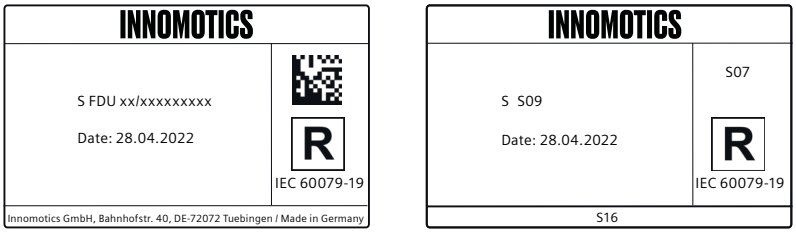

Figure 12-13 Example of a repair rating plate for ATEX

S09 Serial number

S07 Data matrix code

S16 Manufacturer's address and country of origin

12.5 Weight

The weight of the entire geared motor is given in the shipping papers.

The weight is stated on the rating plate of the motor, gearbox or geared motor.

The weight specification refers only to the product in the delivery state.

12.6 Sound energy level

The geared motors have noise levels below the permissible noise levels defined for gearboxes in VDI Guideline 2159 and for motors in IEC 60034-9. Interaction with gearboxes causes the motor noise values L_{pfA} or L_{WA} to increase on average by 3 to 5 dB (A).

The circumferential velocity of the motor pinion has a significant influence on the additional gearbox noise level. As a consequence, higher speeds or lower ratios result in higher noise.

The geared motors provide a decisive advantage as the motor plug-on pinion allows transmission ratios of up to 12 in the input stage.

Code	Description	Unit
L_{pfA}	A-weighted enveloping surface sound pressure level	dB (A)
L_{WA}	Sound power level	dB (A)

External noise

Noise not generated by the gearbox but emitted from it are not taken into consideration.

Noise emitted by the drive and driven machines or the base are also not taken into consideration. Even when the noise from the gearbox have been transferred there.

12.7 Mounting positions

12.7.1 General notes on mounting positions

Only operate the gearbox in the mounting position specified on the rating plate. This ensures that the correct quantity of lubricant is provided.

The symbols are shown for the standard mounting position.

Note

Gearbox sizes 19 and 29

Gearbox sizes 19 and 29 are lubricated for life. There is no opening to check the oil level.

In mounting positions M2 and M4 the gearboxes have a breather valve.

C29 has a breather valve in all mounting positions.

Note

Worm gearbox or worm geared motor

Gearboxes are lubricated for life. There are no openings to check the oil level.

Description of the symbols:

Venting

Oil level

Oil drain

A, B Position of insert shaft / solid shaft
* On opposite side
① Oil level check not possible for tandem gearbox (main gearbox a)
② Two-stage gearbox
③ Three-stage gearbox

12.7.2 Single-stage helical gearboxes

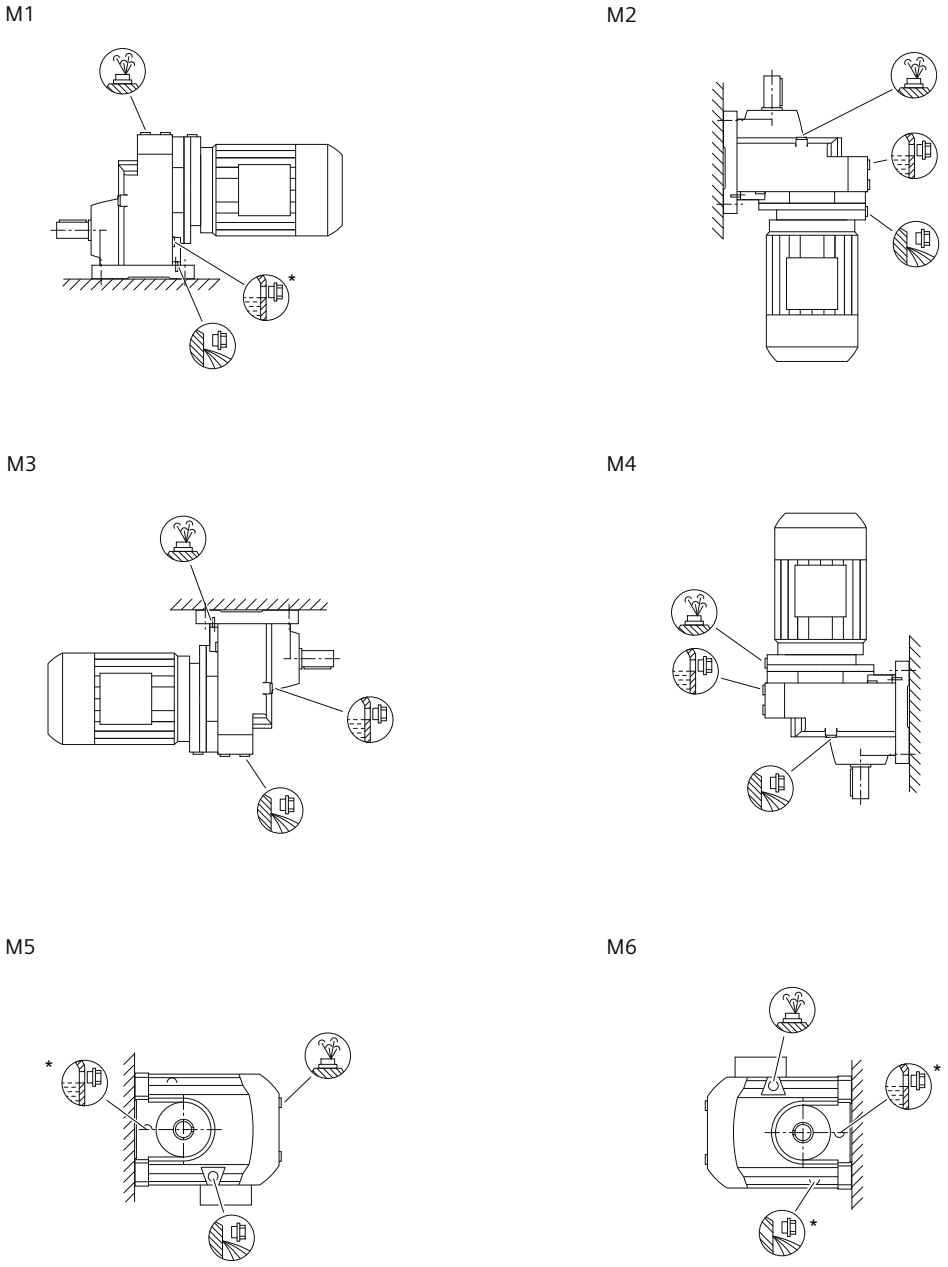

Figure 12-14 Mounting positions for helical gearbox E, foot-mounted design, sizes 39 - 149

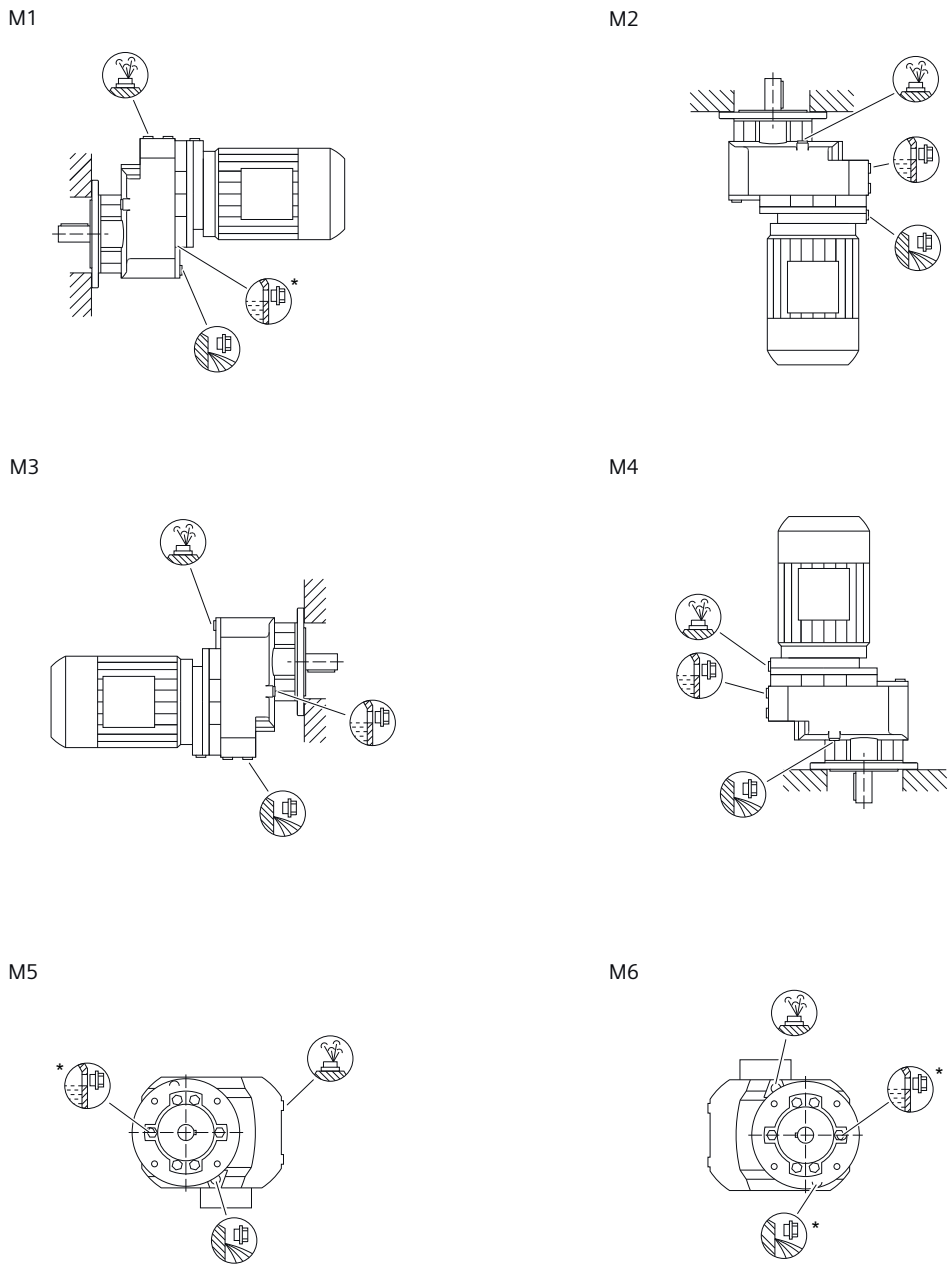

Figure 12-15 Mounting positions for helical gearbox EF/EZ, flange-mounted design, sizes 39 - 149

12.7.3 Two- and three-stage helical gearbox

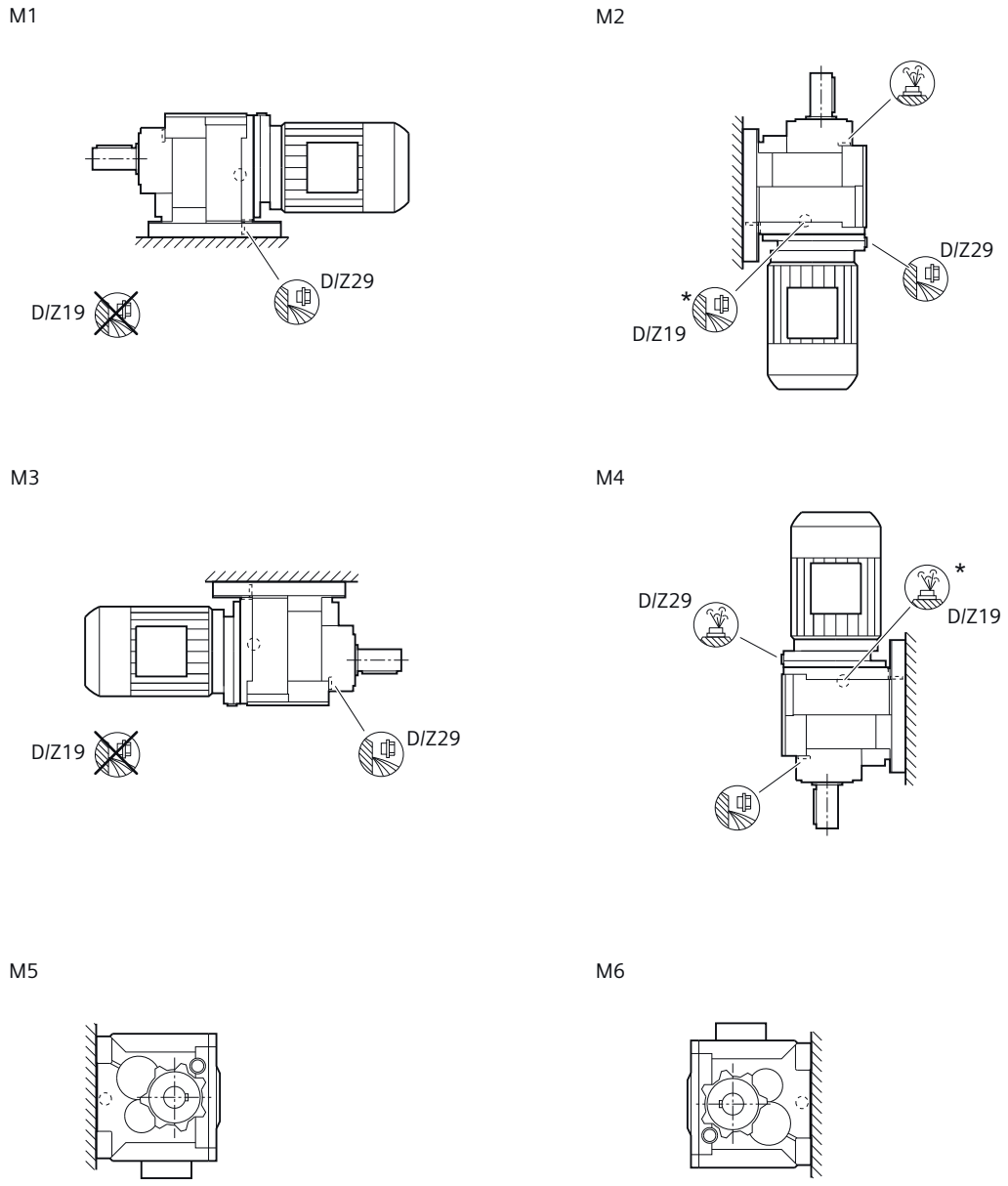

Figure 12-16 Mounting positions for helical gearbox D/Z foot-mounted design, sizes 19 - 29

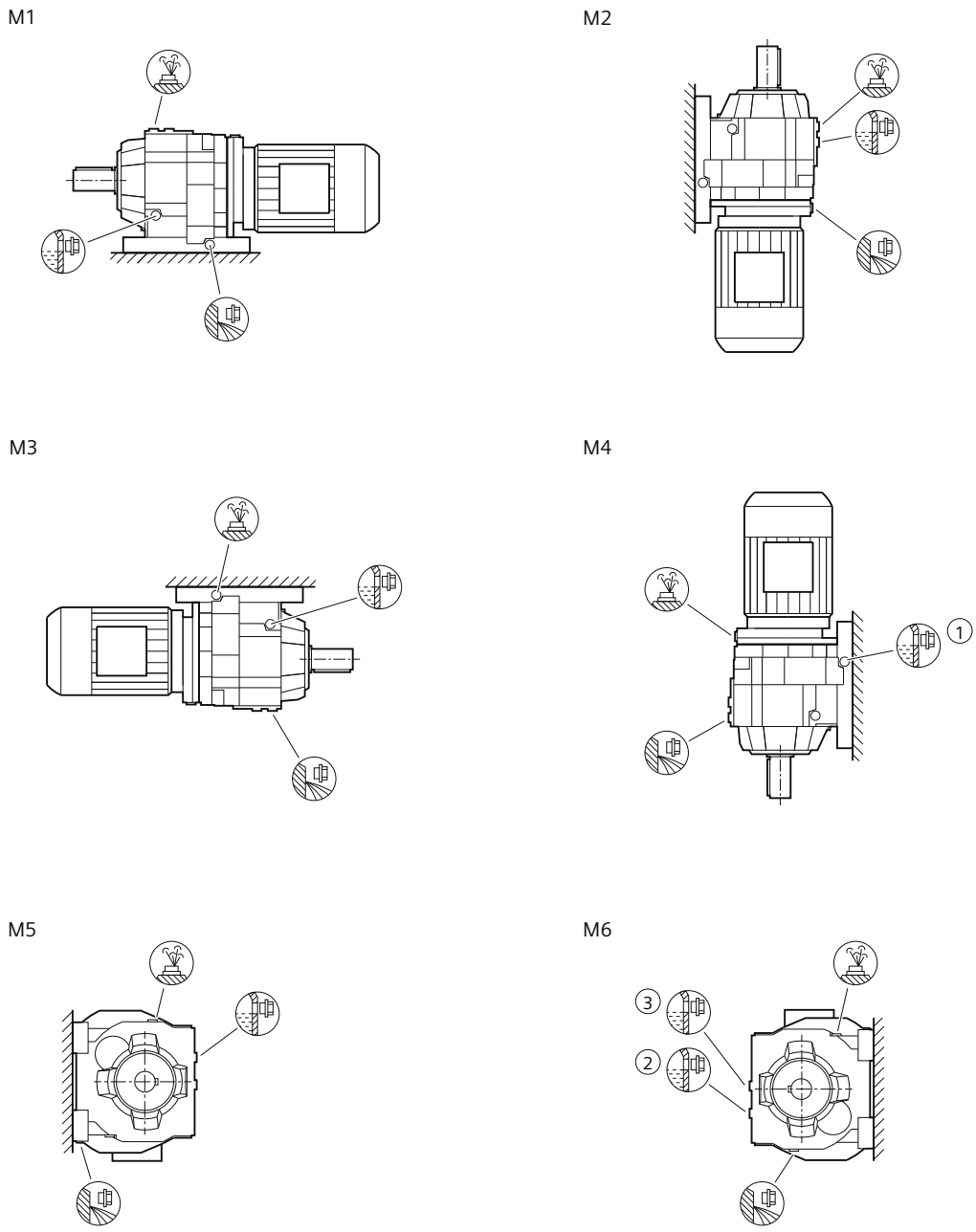

Figure 12-17 Mounting positions for helical gearbox D/Z foot-mounted design, sizes 39 - 189

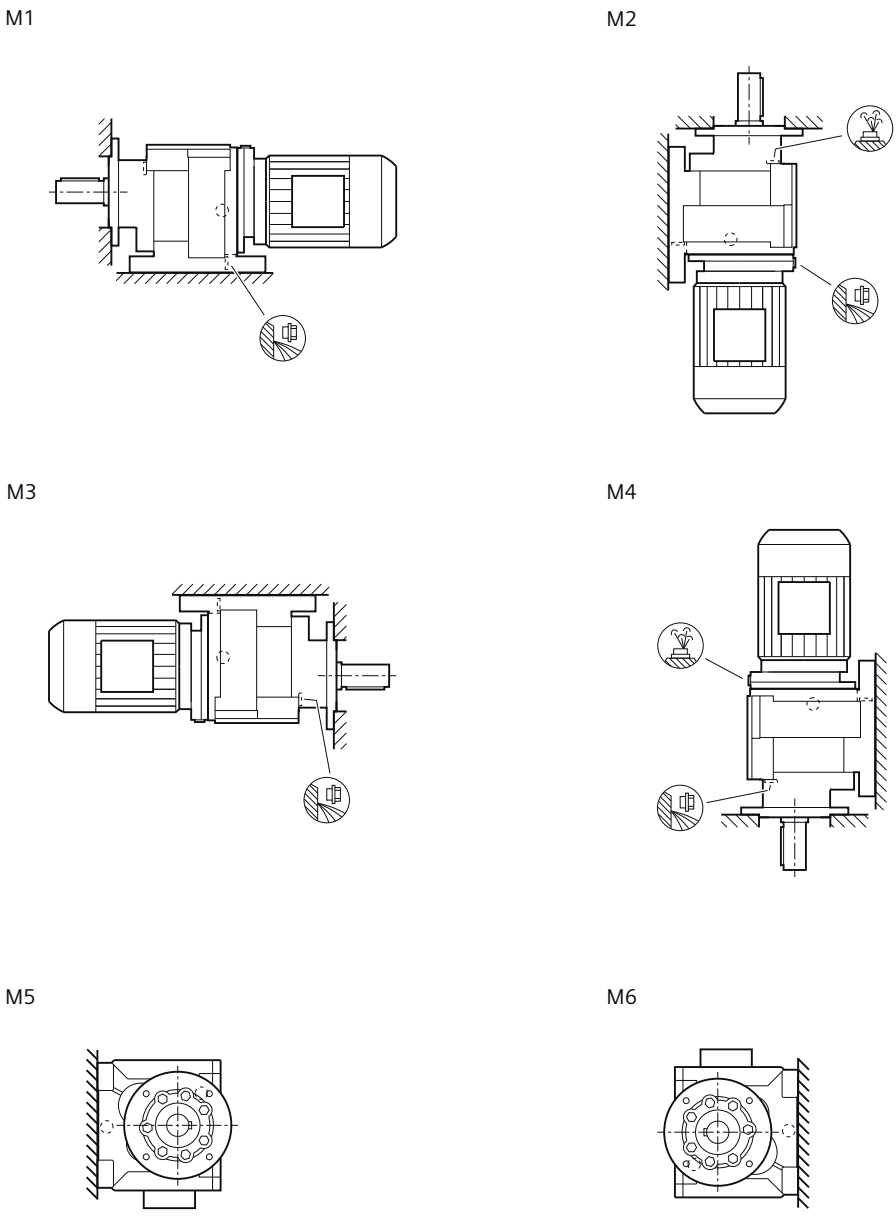

Figure 12-18 Mounting positions for helical gearbox DB/ZB foot / flange-mounted design, size 29

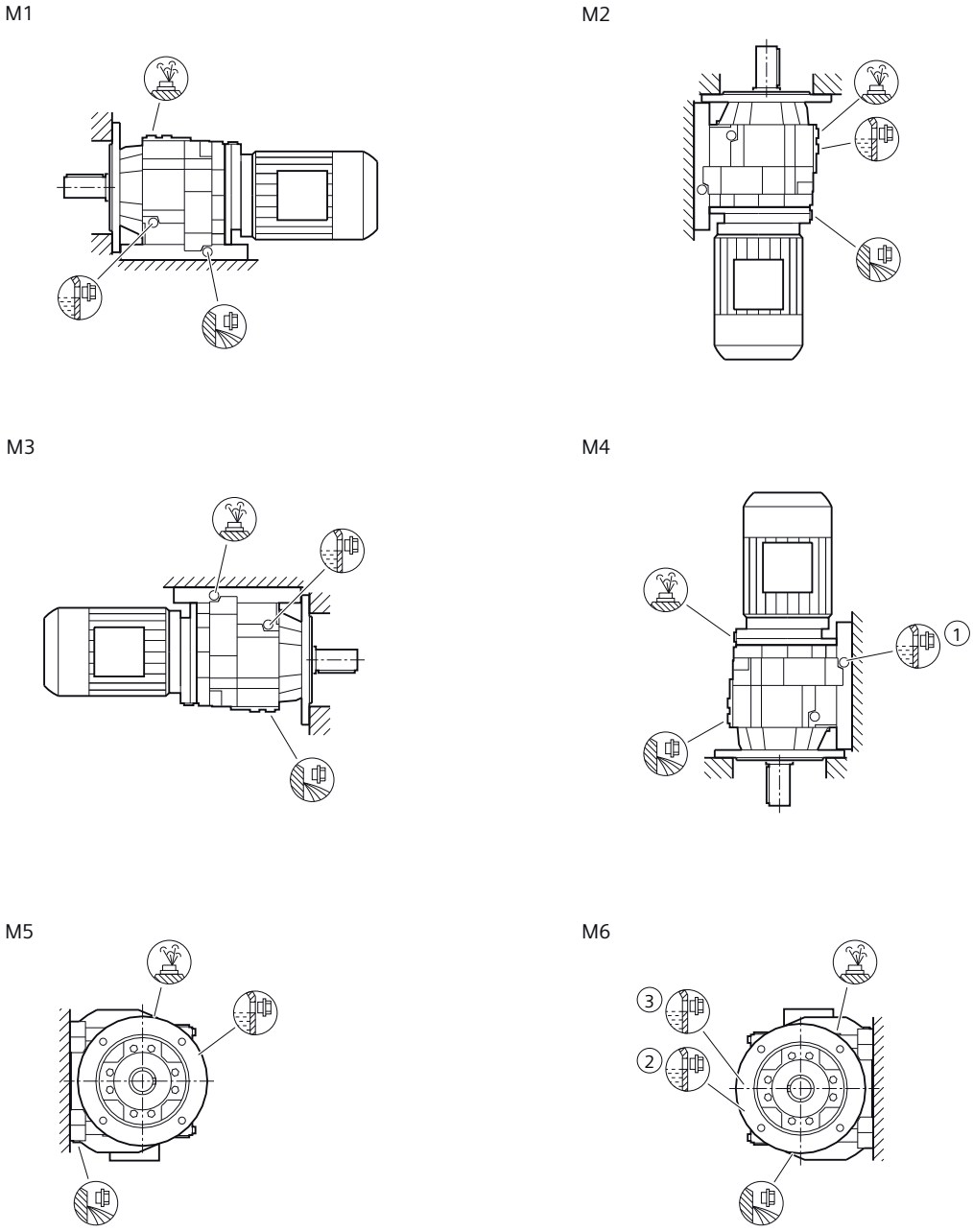

Figure 12-19 Mounting positions for helical gearbox DB/ZB foot / flange-mounted design, sizes 39 - 89

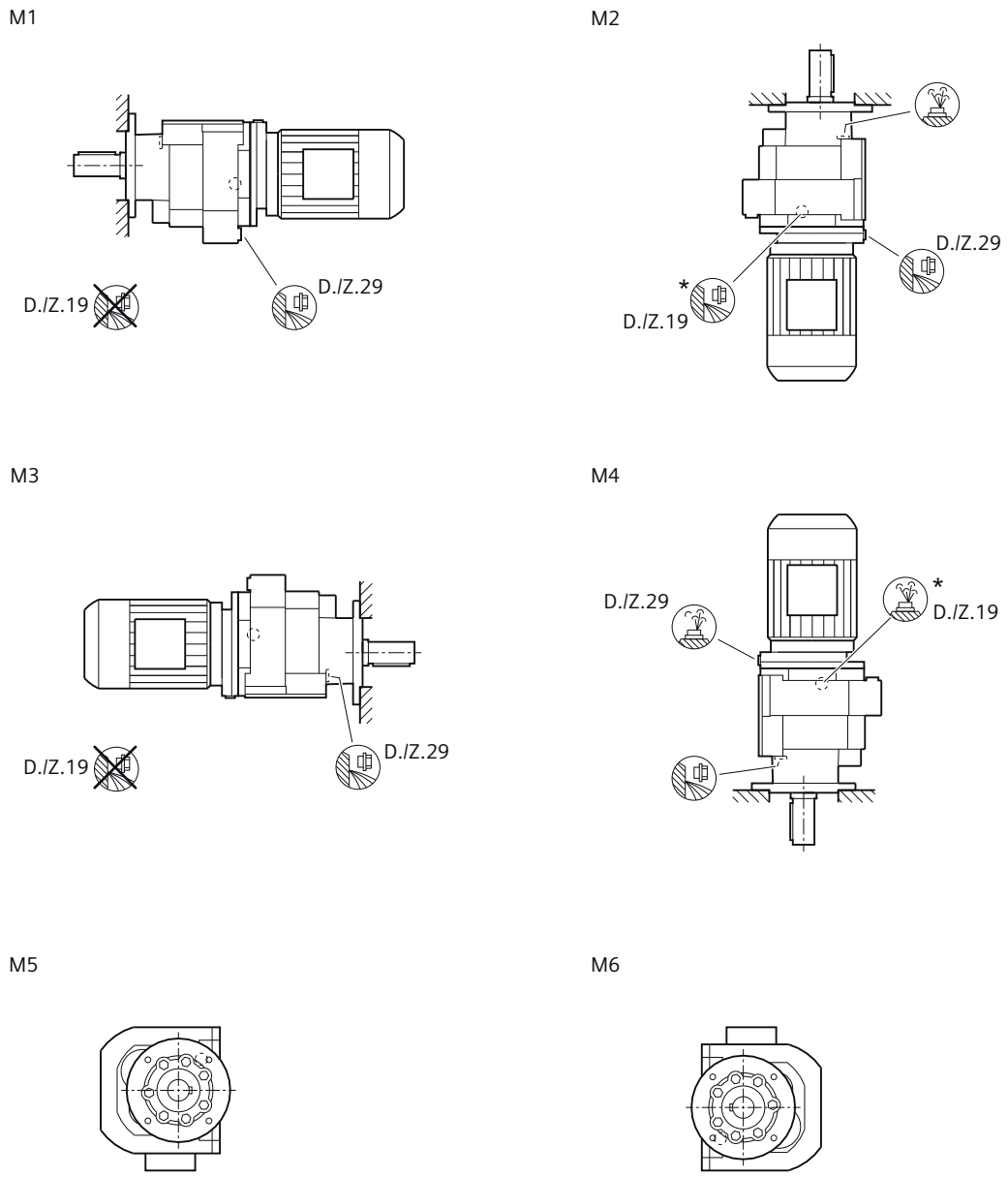

Figure 12-20 Mounting positions for helical gearbox DF/ZF flange-mounted design and DZ/ZZ with housing flange, sizes 19 - 29

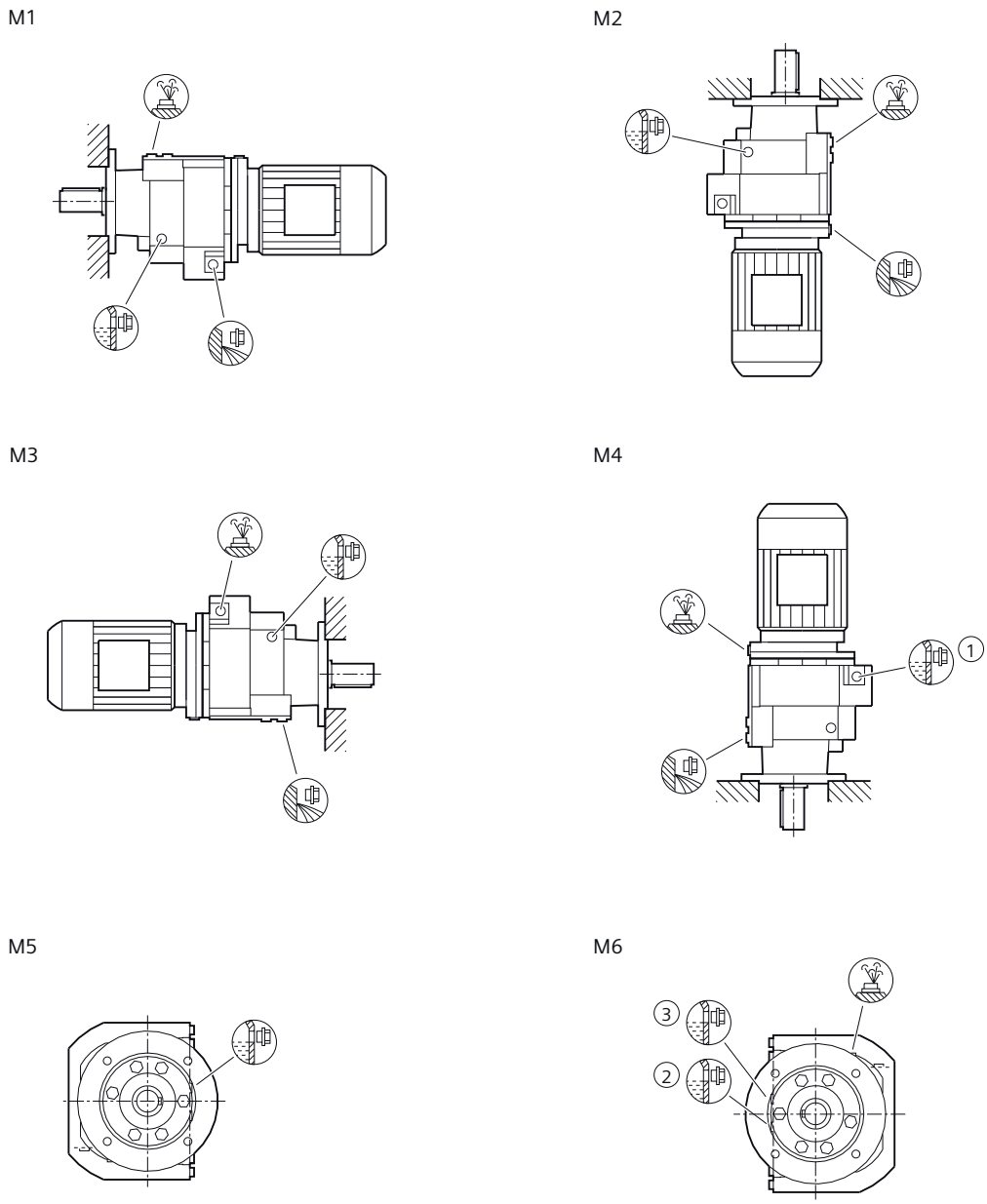

Figure 12-21 Mounting positions for helical gearbox DF/ZF flange-mounted design and DZ/ZZ with housing flange, size 39

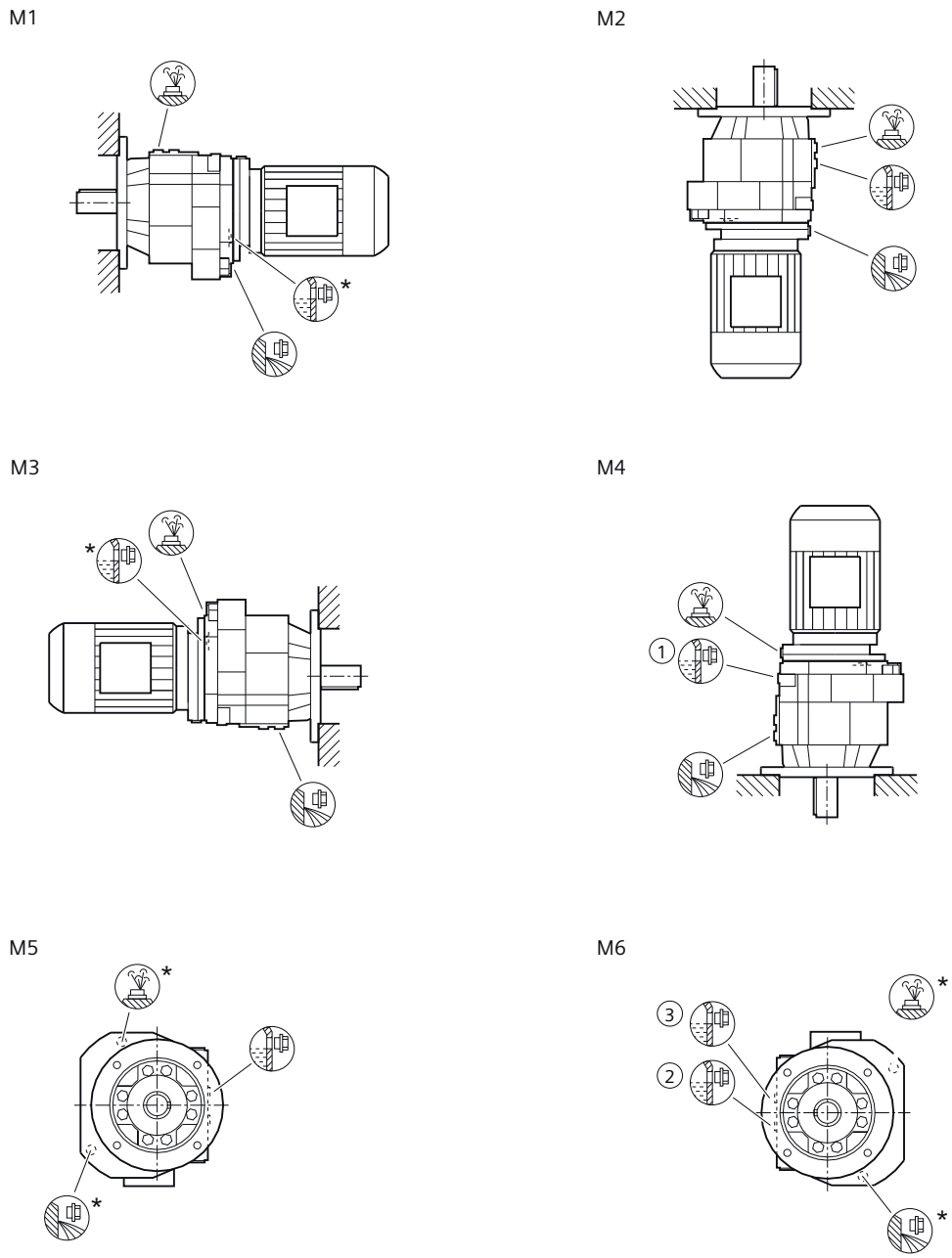

Figure 12-22 Mounting positions for helical gearbox DF/ZF flange-mounted design, sizes 49 - 189 and DZ/ZZ with housing flange, sizes 49 - 129

12.7.4 Parallel shaft gearbox

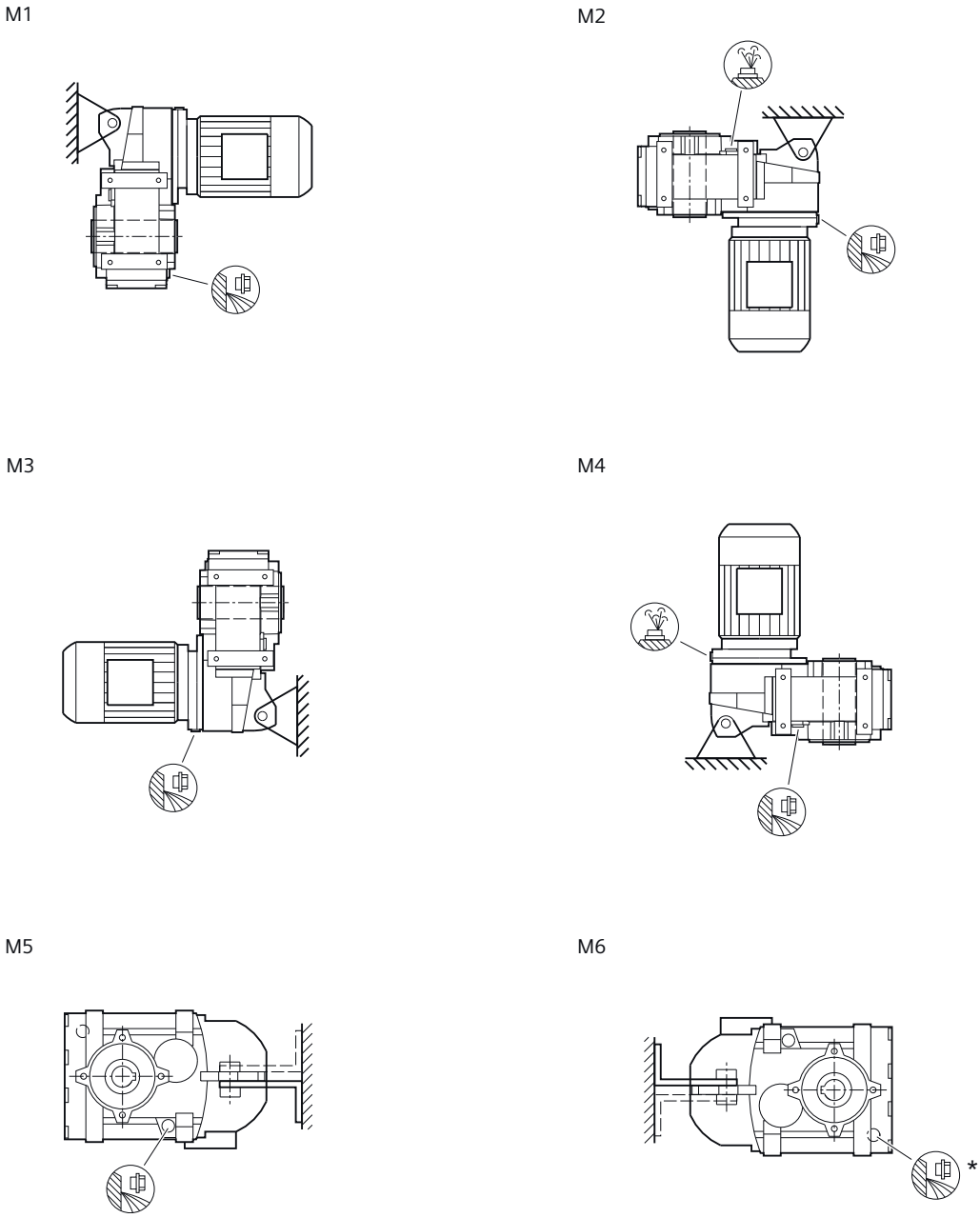

Figure 12-23 Mounting positions for parallel shaft gearbox F.AD shaft-mounted design, size 29

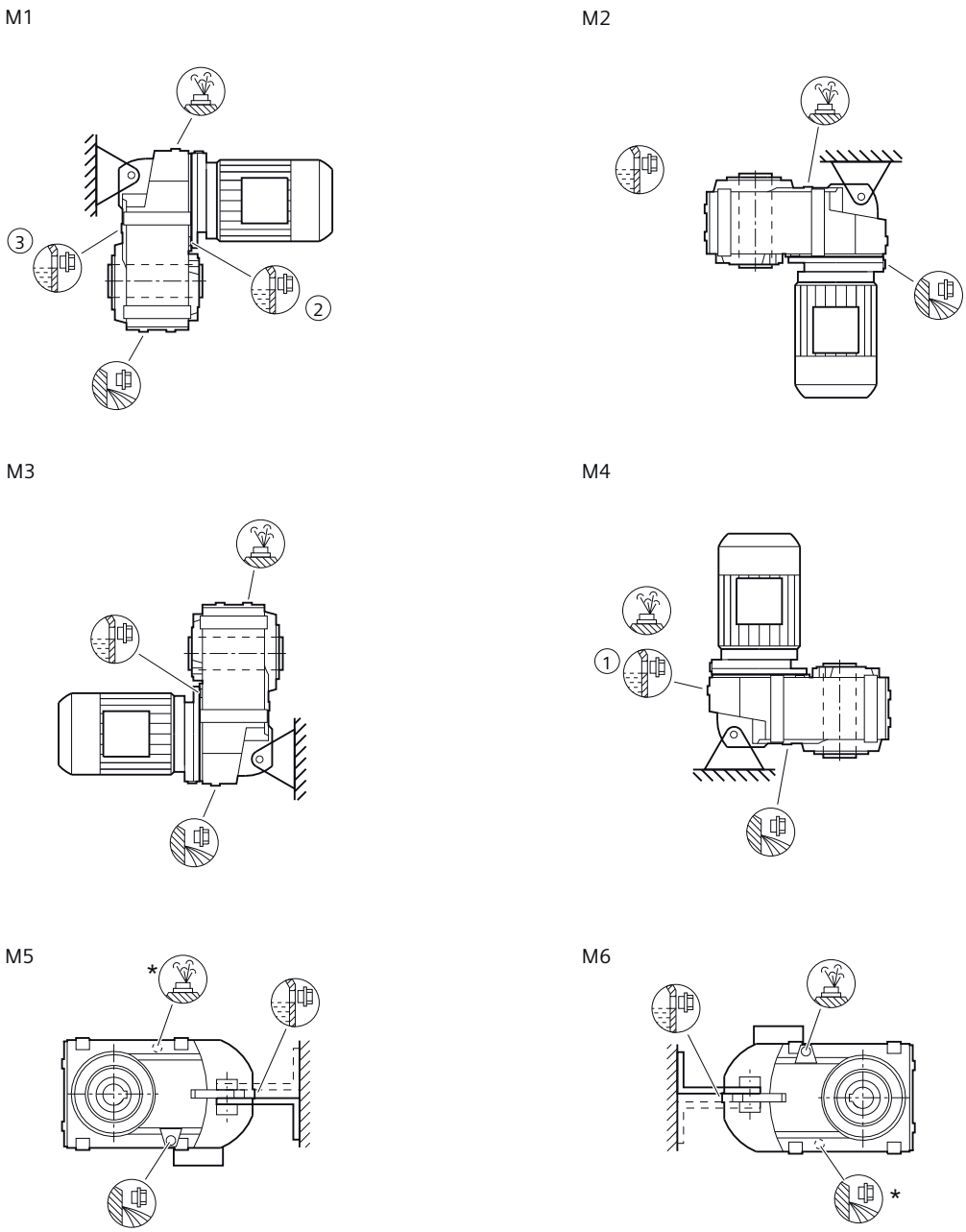

Figure 12-24 Mounting positions for parallel shaft gearbox F.AD shaft-mounted design, sizes 39 - 189

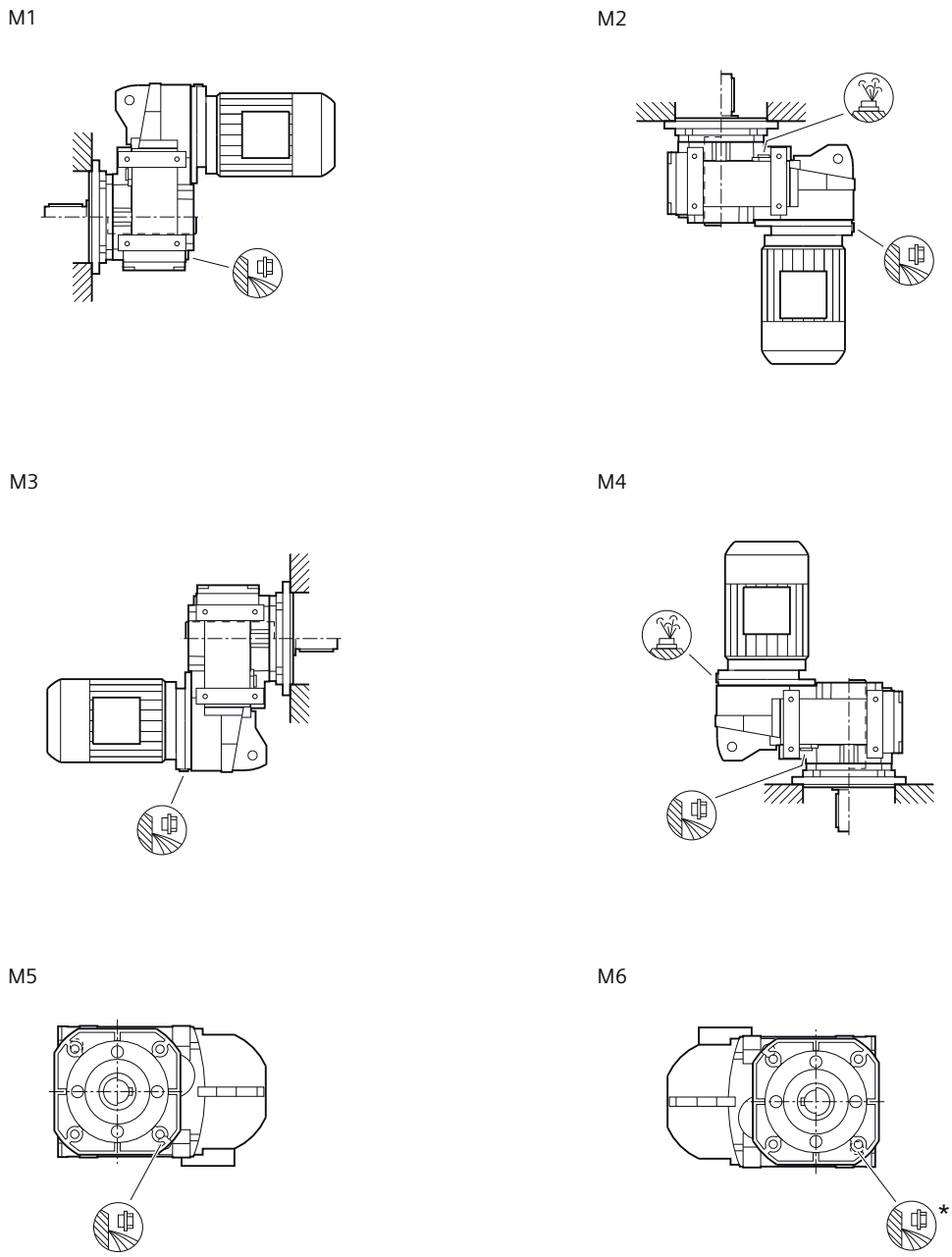

Figure 12-25 Mounting positions for parallel shaft gearbox F.F flange-mounted design and F.Z with housing flange, size 29

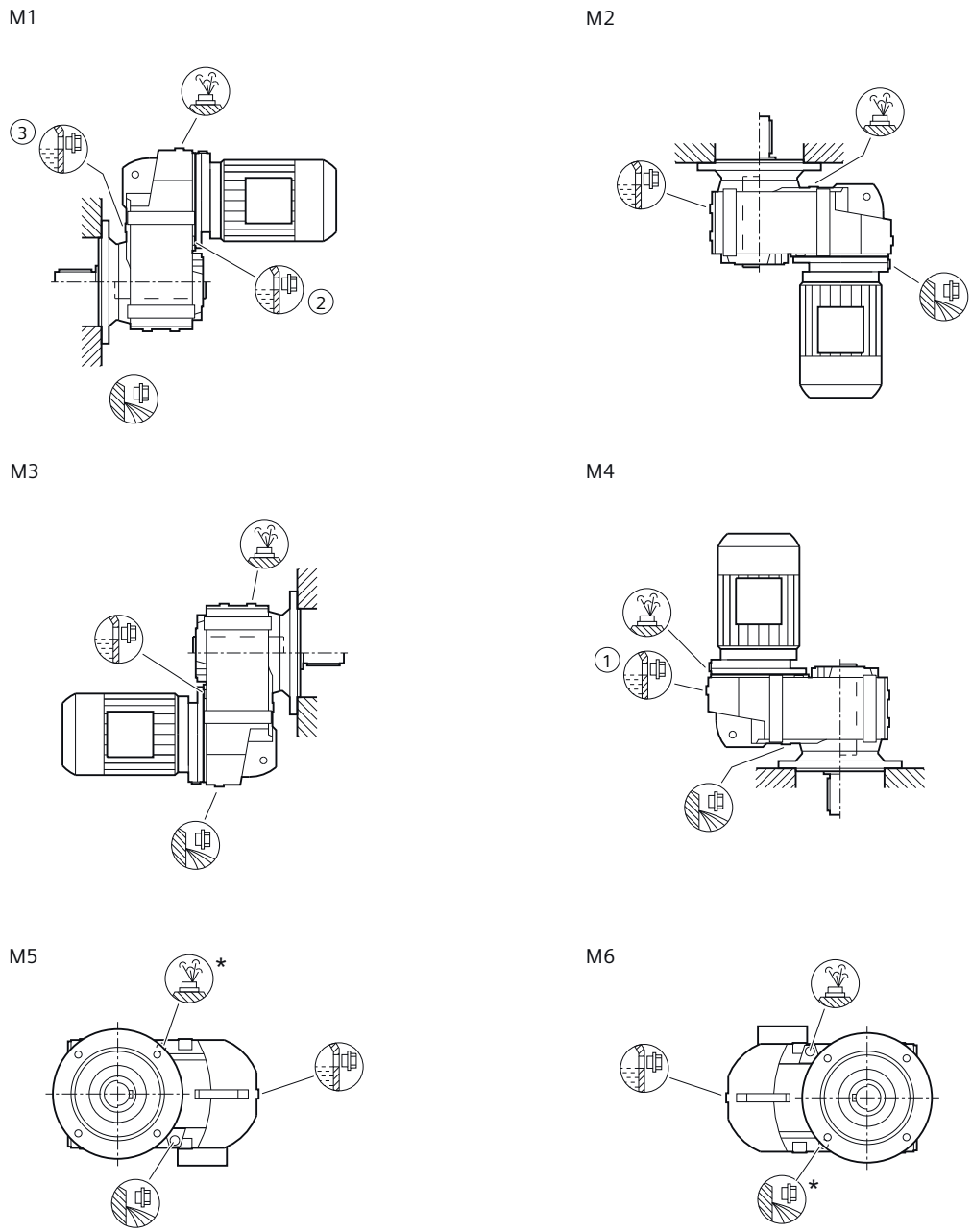

Figure 12-26 Mounting positions for parallel shaft gearbox F.F flange-mounted design and F.Z with housing flange, sizes 39 - 189

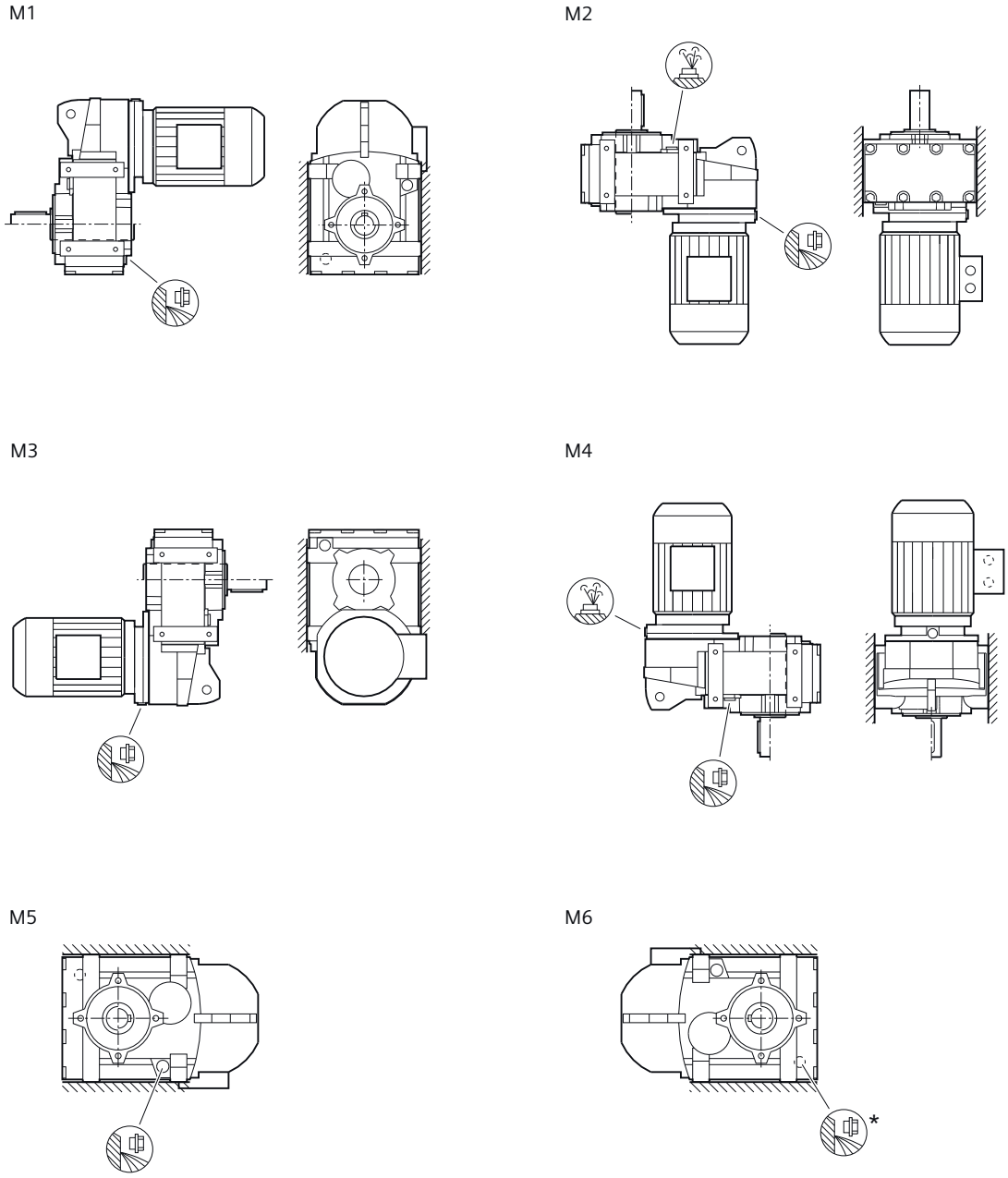

Figure 12-27 Mounting positions for parallel shaft gearbox F foot-mounted design, size 29

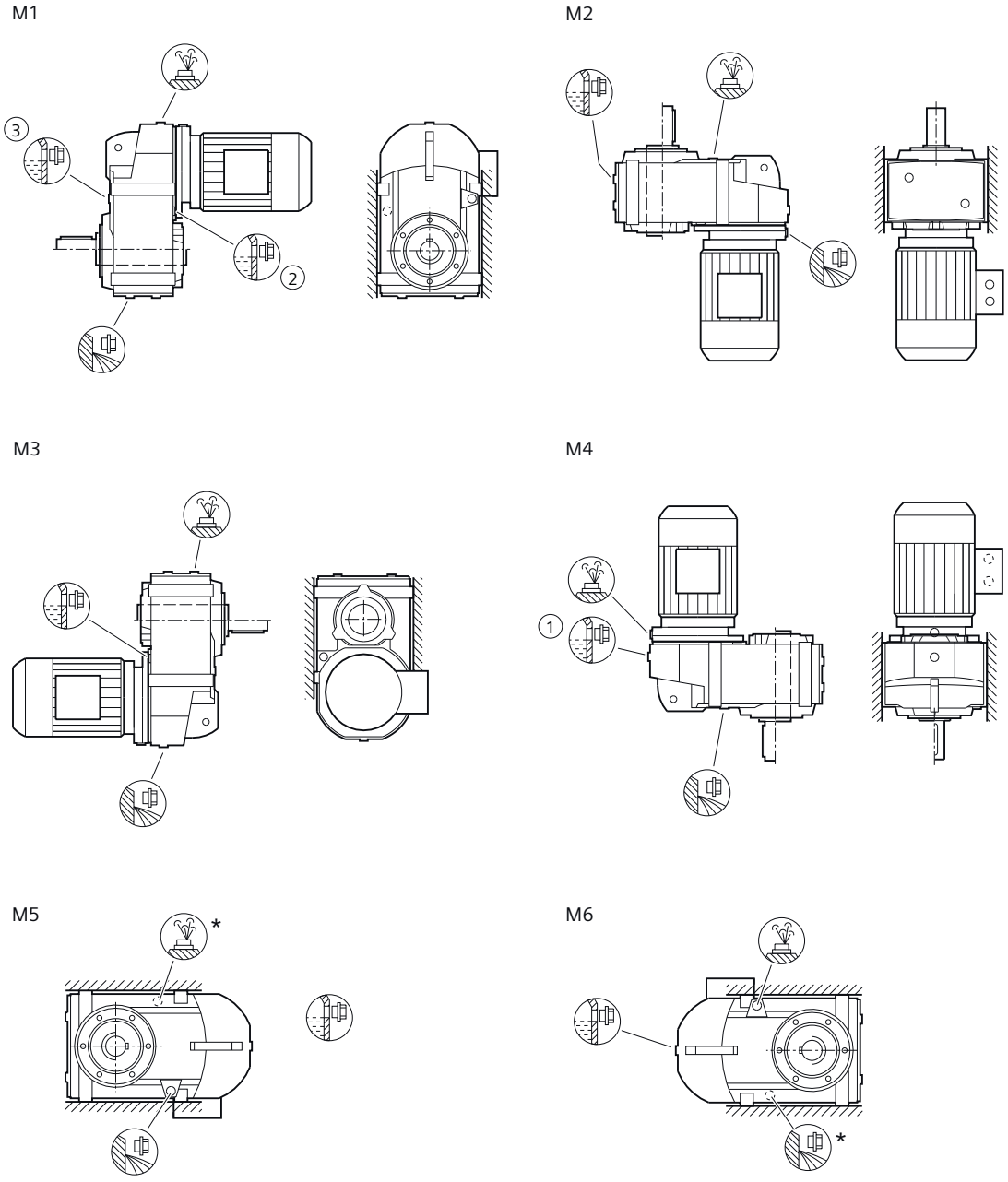

Figure 12-28 Mounting positions for parallel shaft gearbox F. foot-mounted design, sizes 39 - 189

12.7.5 Bevel gearbox

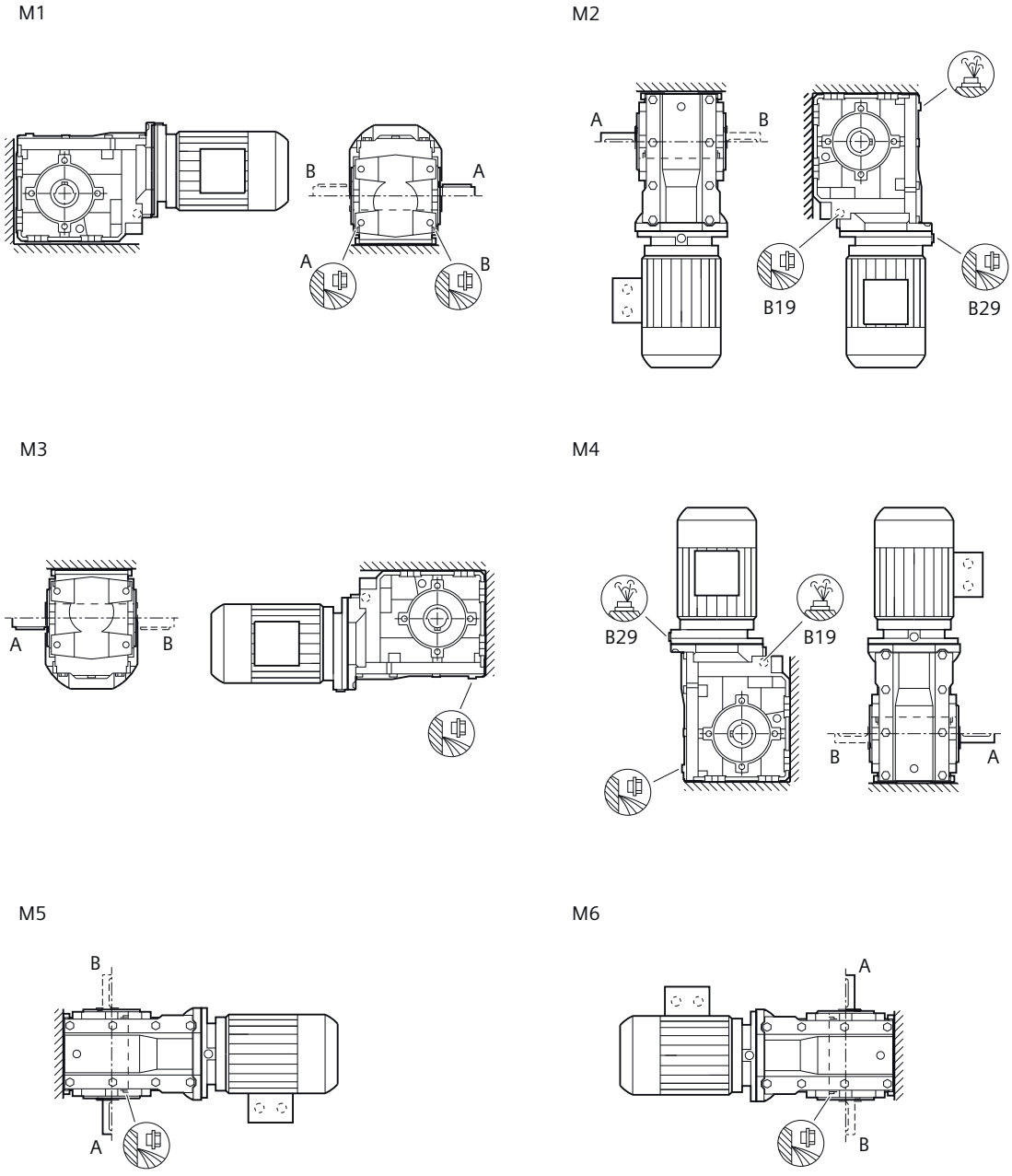

Figure 12-29 Mounting positions for bevel gearbox B foot-mounted design, sizes 19 - 29

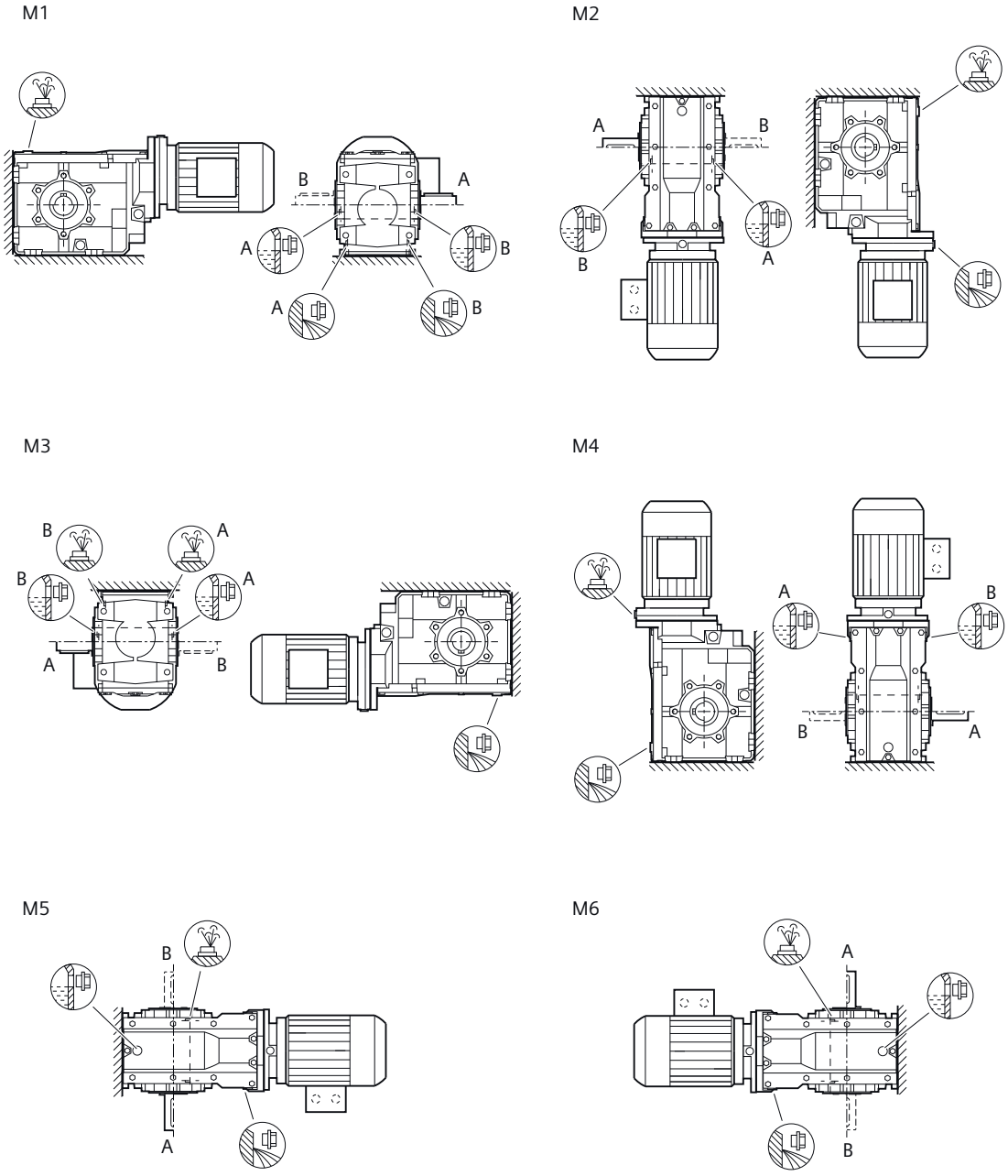

Figure 12-30 Mounting positions for bevel gearbox B foot-mounted design, sizes 39 - 49

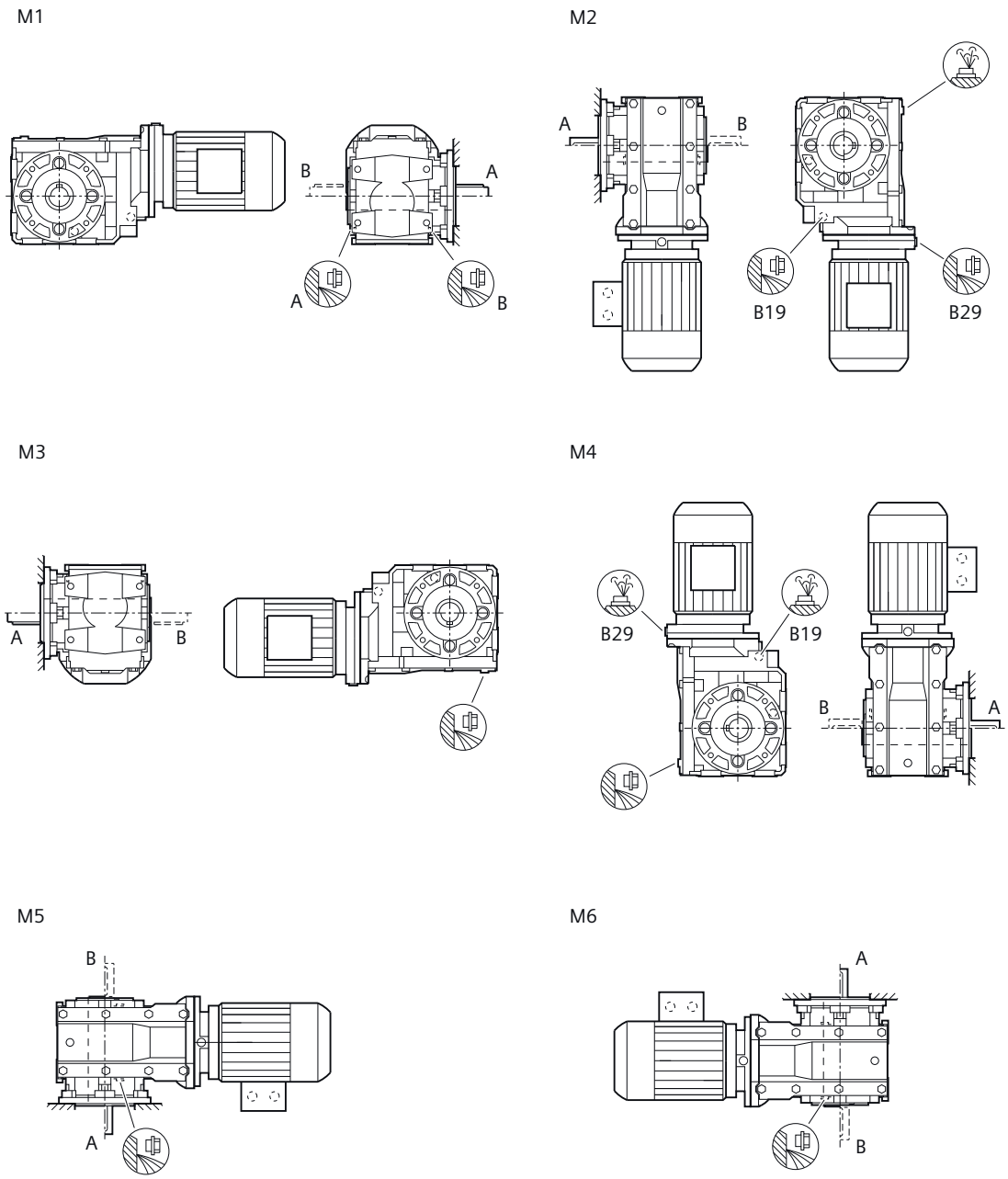

Figure 12-31 Mounting positions for bevel gearbox B.F flange-mounted design and B.Z with housing flange, sizes 19 - 29

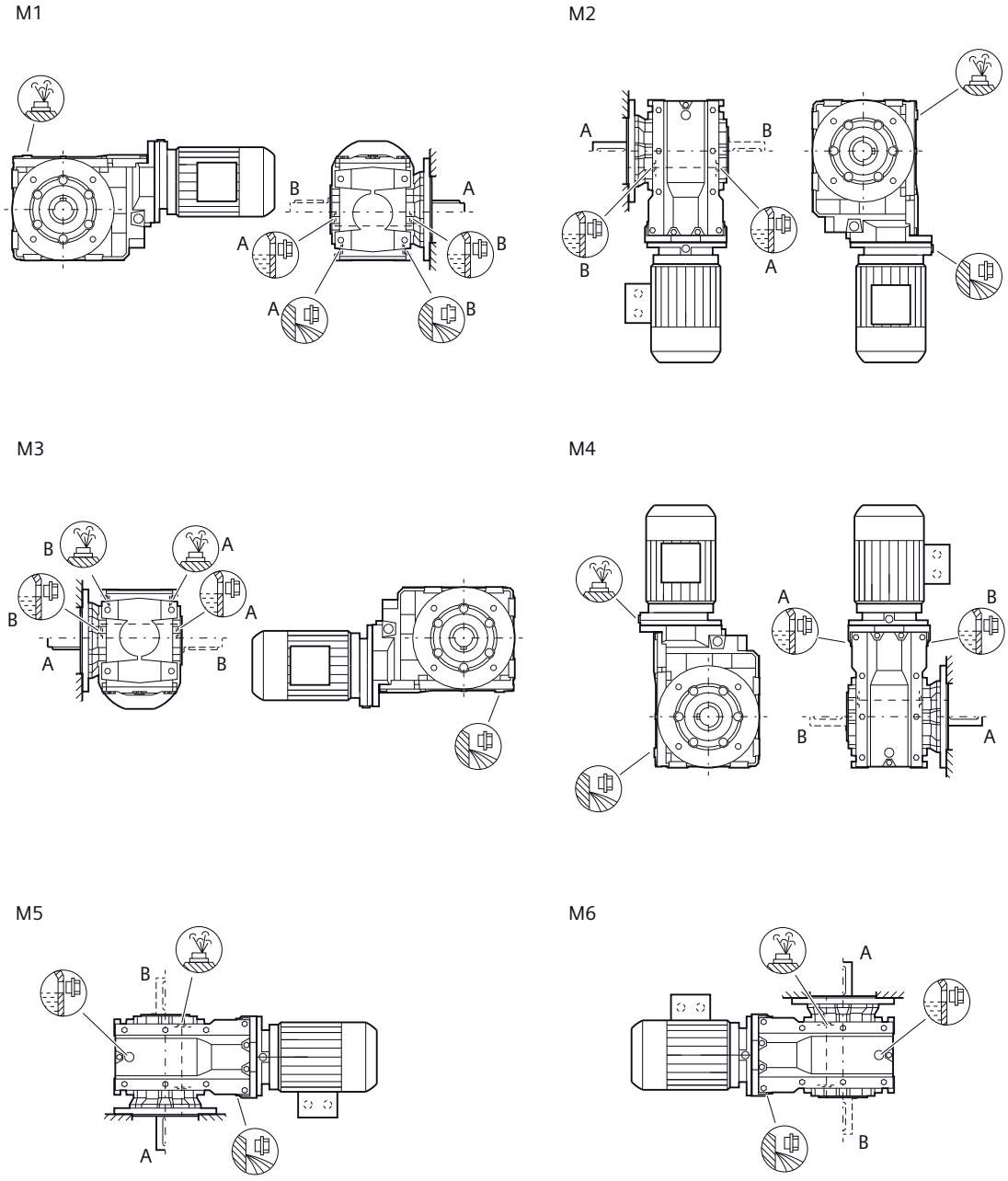

Figure 12-32 Mounting positions for bevel gearbox B.F flange-mounted design and B.Z with housing flange, sizes 39 - 49

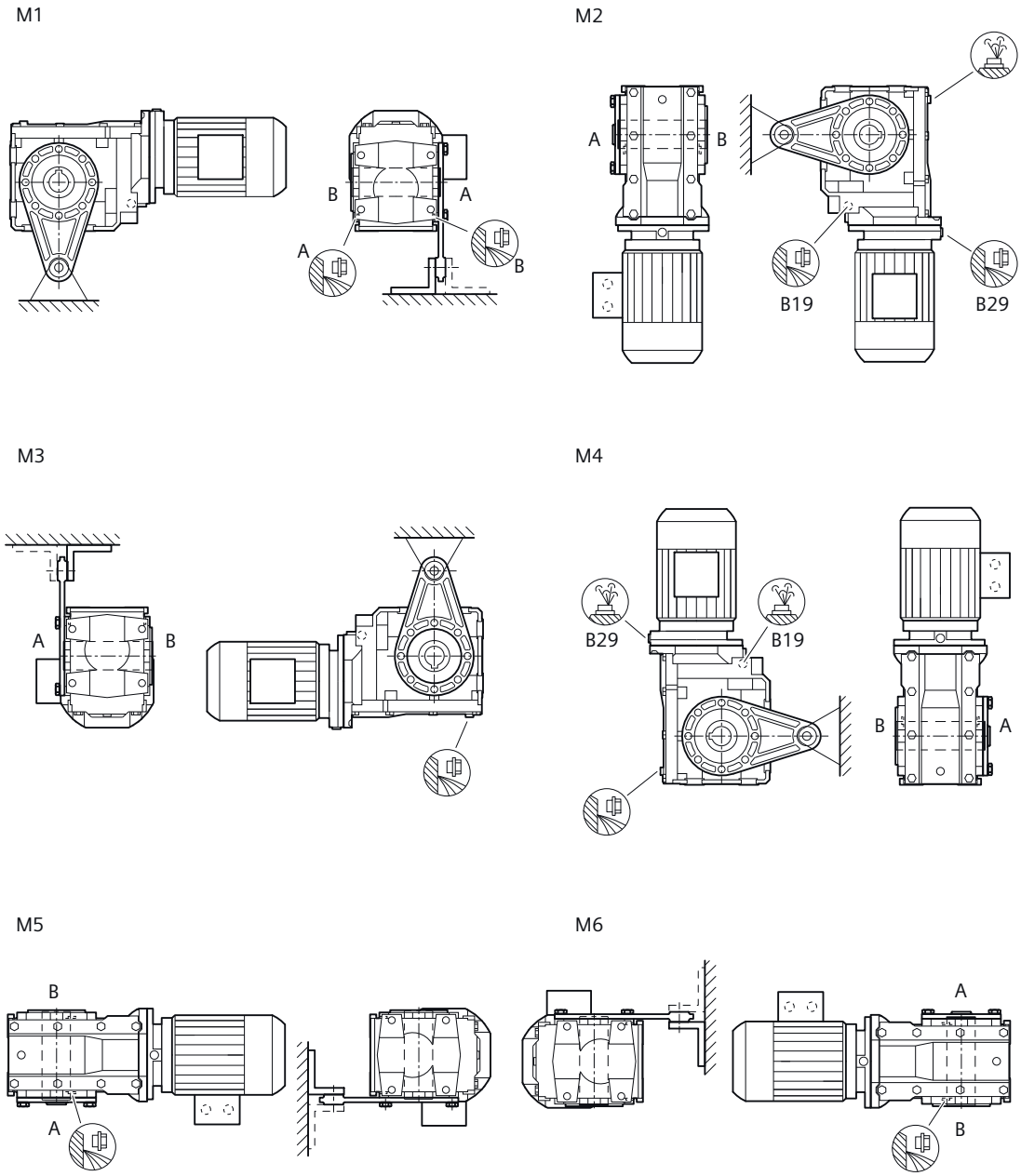

Figure 12-33 Mounting positions for bevel gearbox BAD shaft-mounted design, sizes 19 - 29

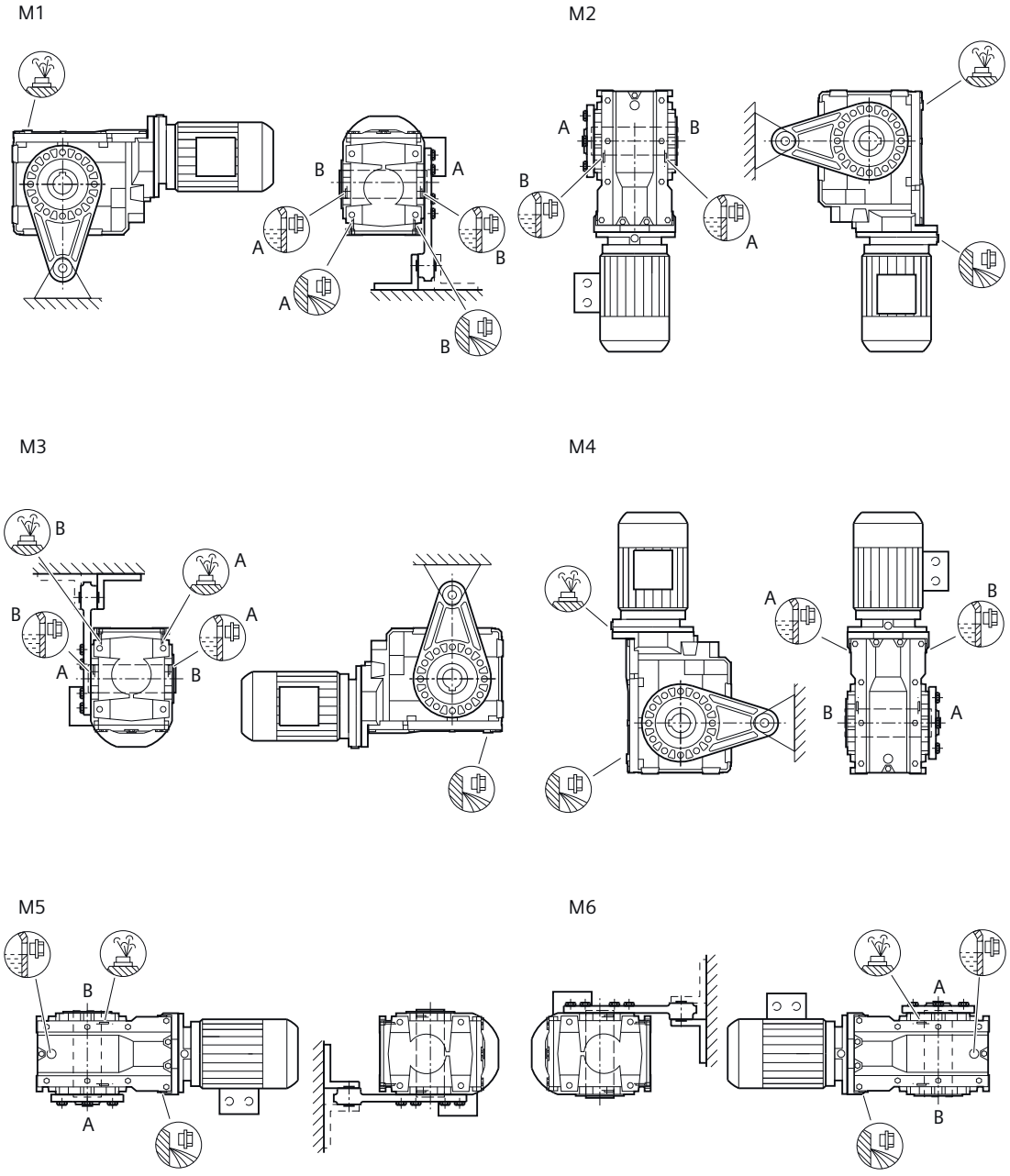

Figure 12-34 Mounting positions for bevel gearbox BAD shaft-mounted design, sizes 39 - 49

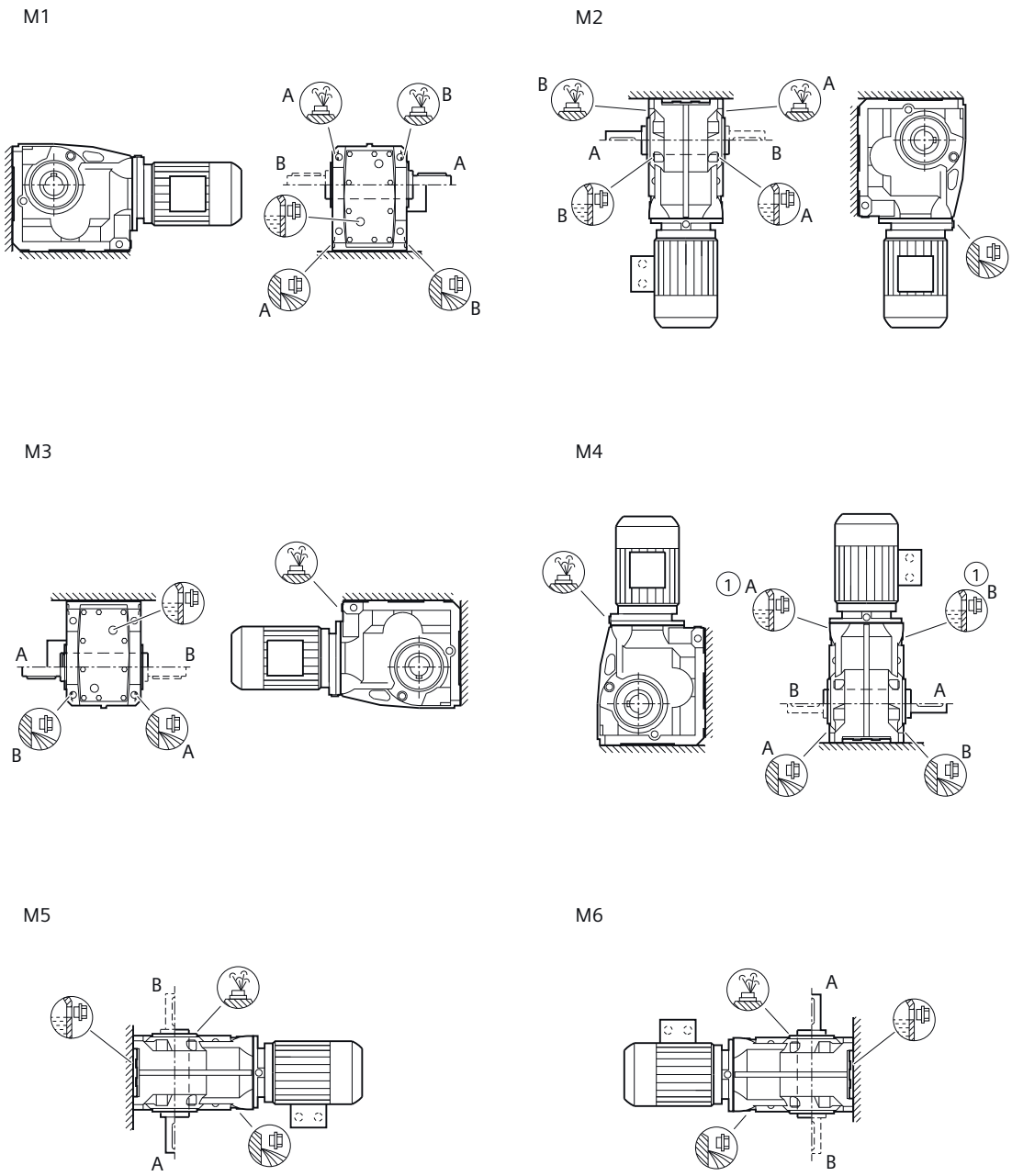

Figure 12-35 Mounting positions for bevel gearbox K. foot-mounted design, sizes 39 - 189

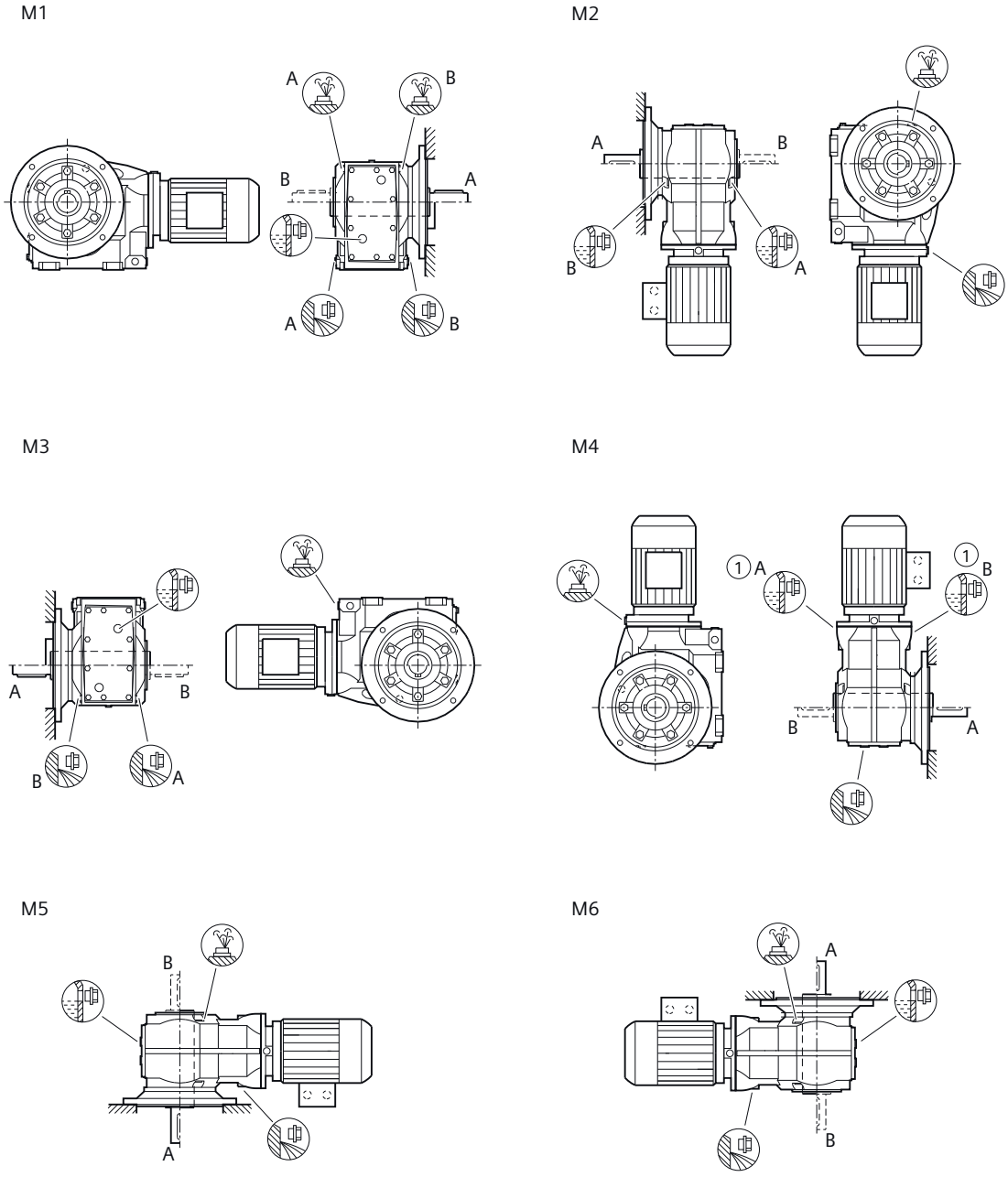

Figure 12-36 Mounting positions for bevel gearbox K.F flange-mounted design and KAZ with housing flange, sizes 39 - 189

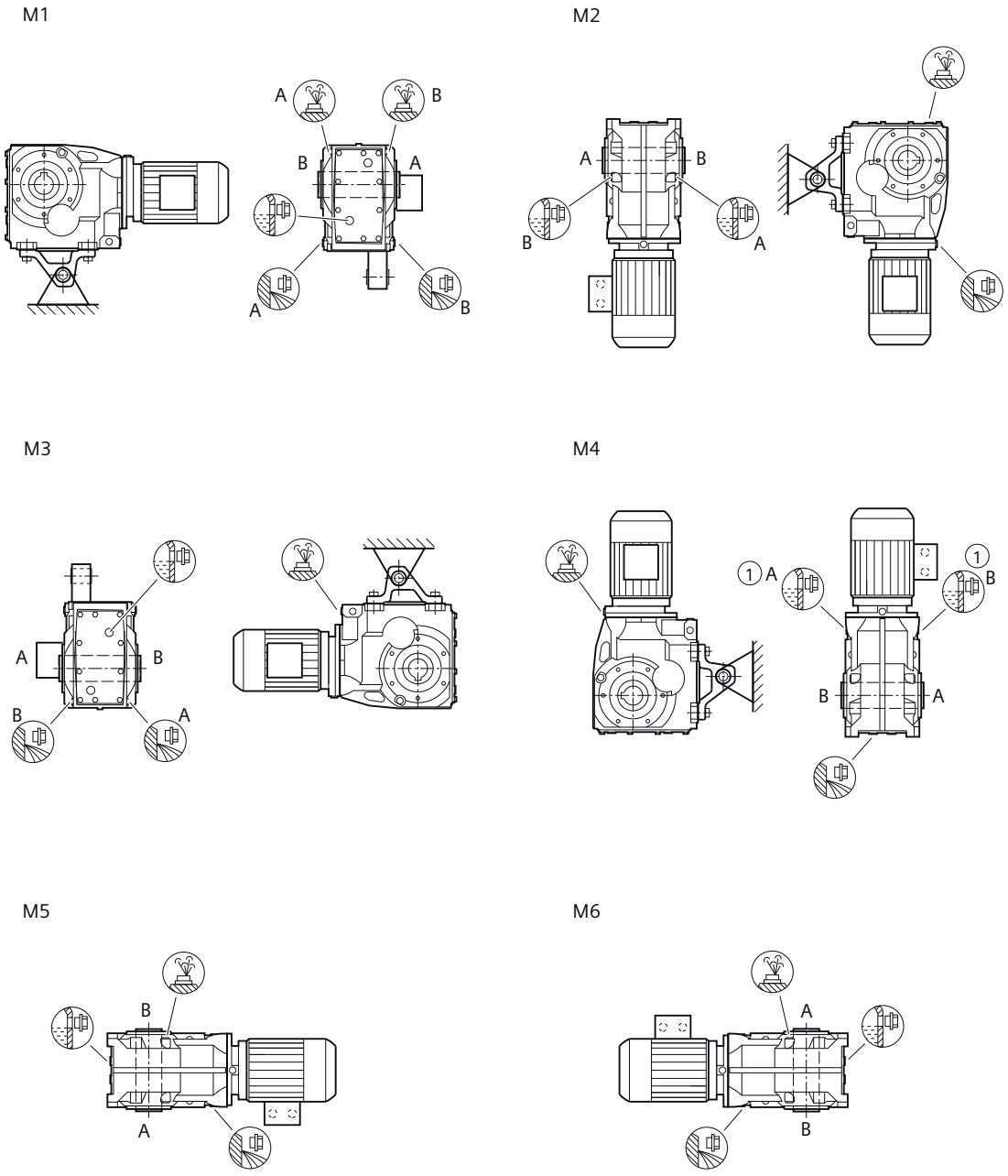

Figure 12-37 Mounting positions for bevel gearboxes KAD shaft-mounted design, sizes 39 - 189

12.7.6 Helical worm gearbox

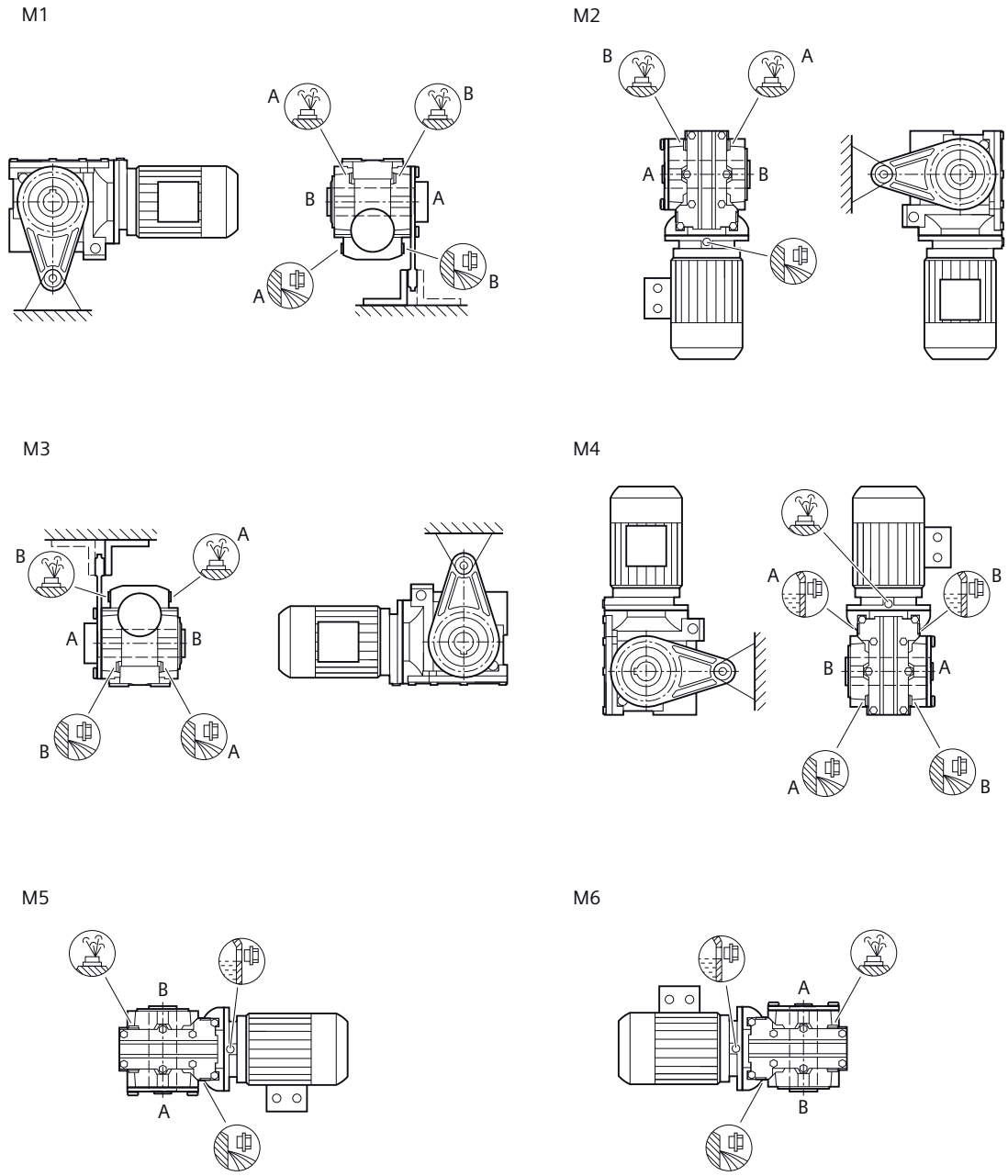

Figure 12-38 Mounting positions for helical worm gearbox CAD shaft-mounted design, size 29

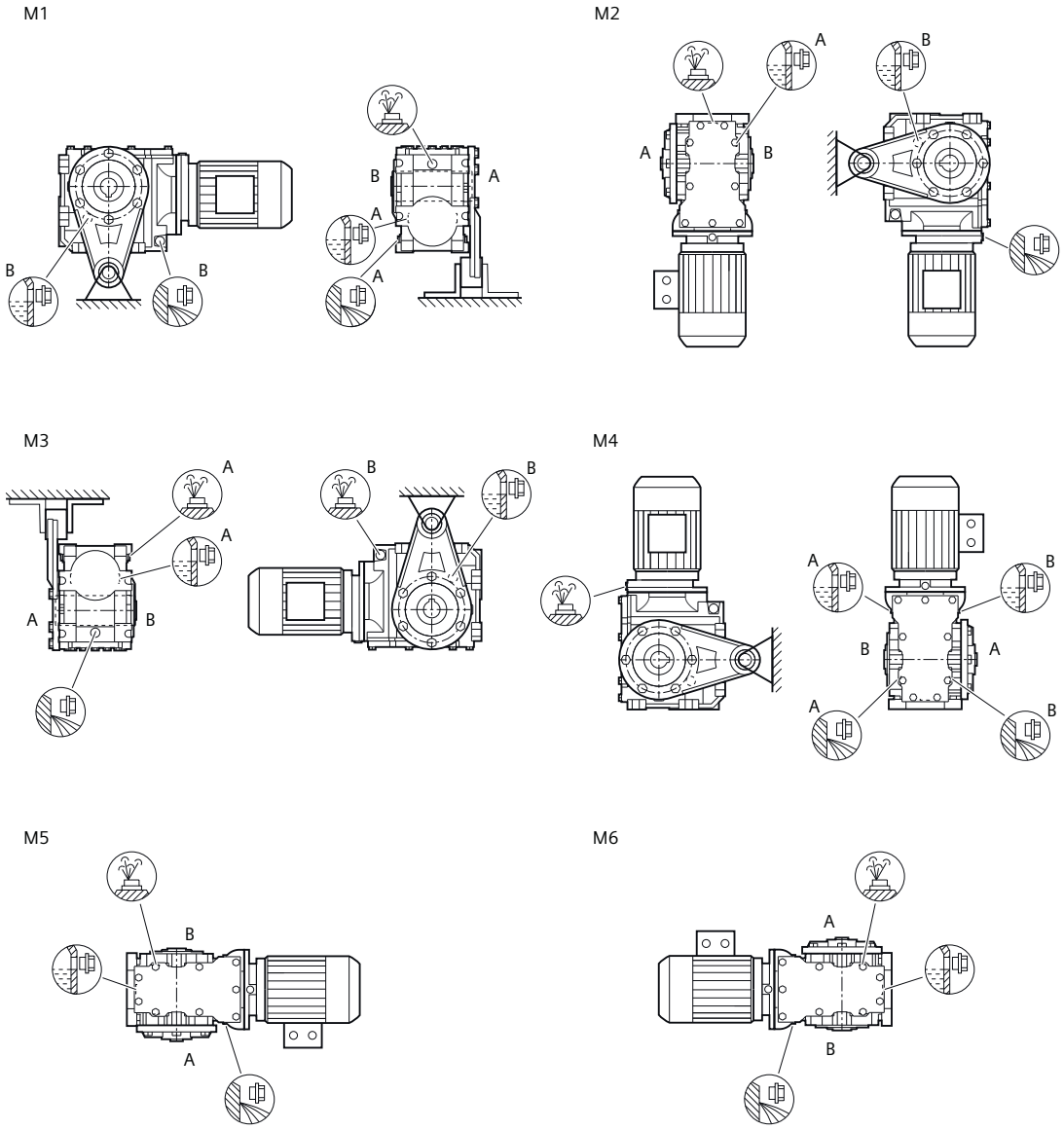

Figure 12-39 Mounting positions for helical worm gearbox CAD shaft-mounted design, size 39A

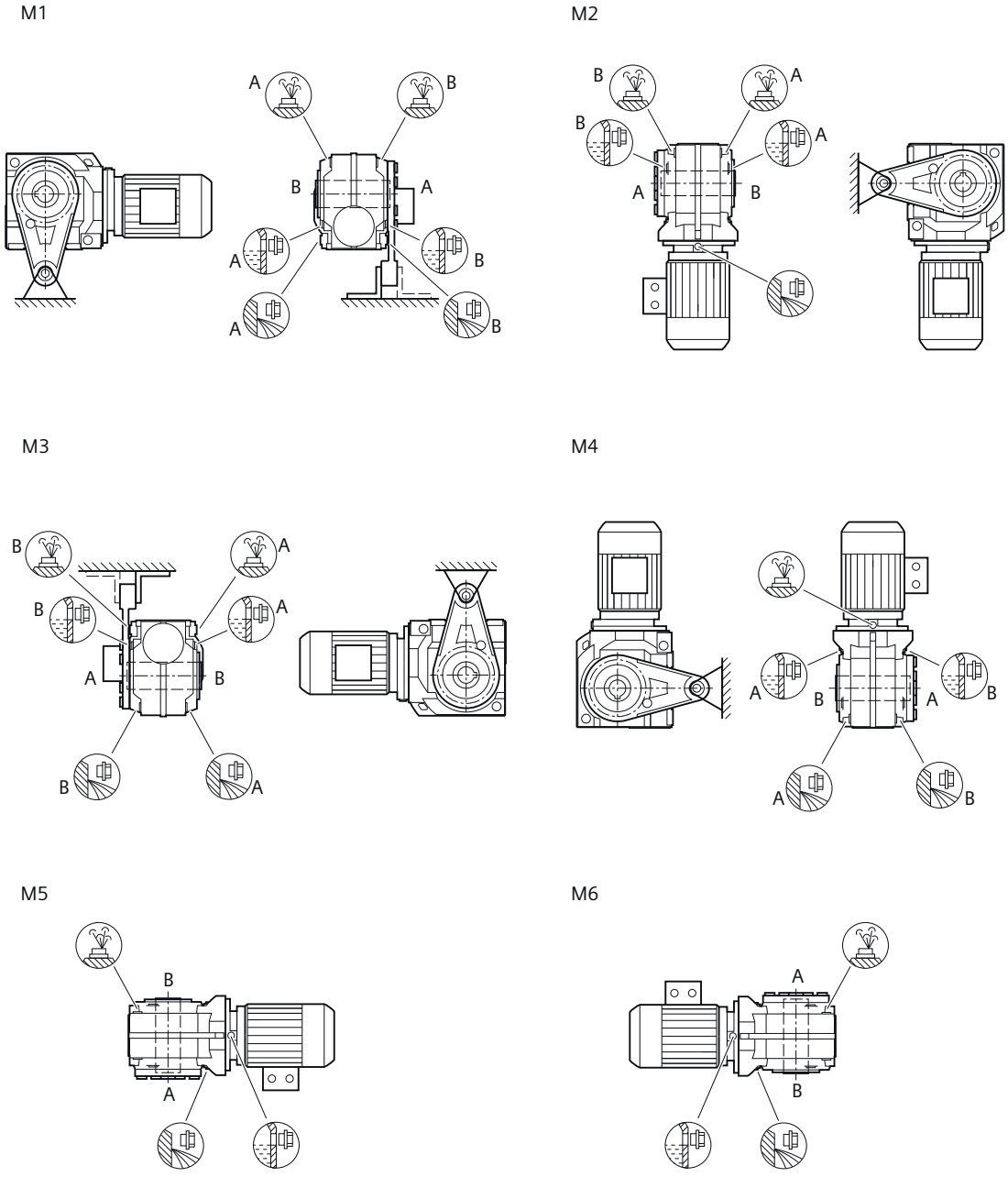

Figure 12-40 Mounting positions for helical worm gearbox CAD shaft-mounted design, sizes 39 - 89

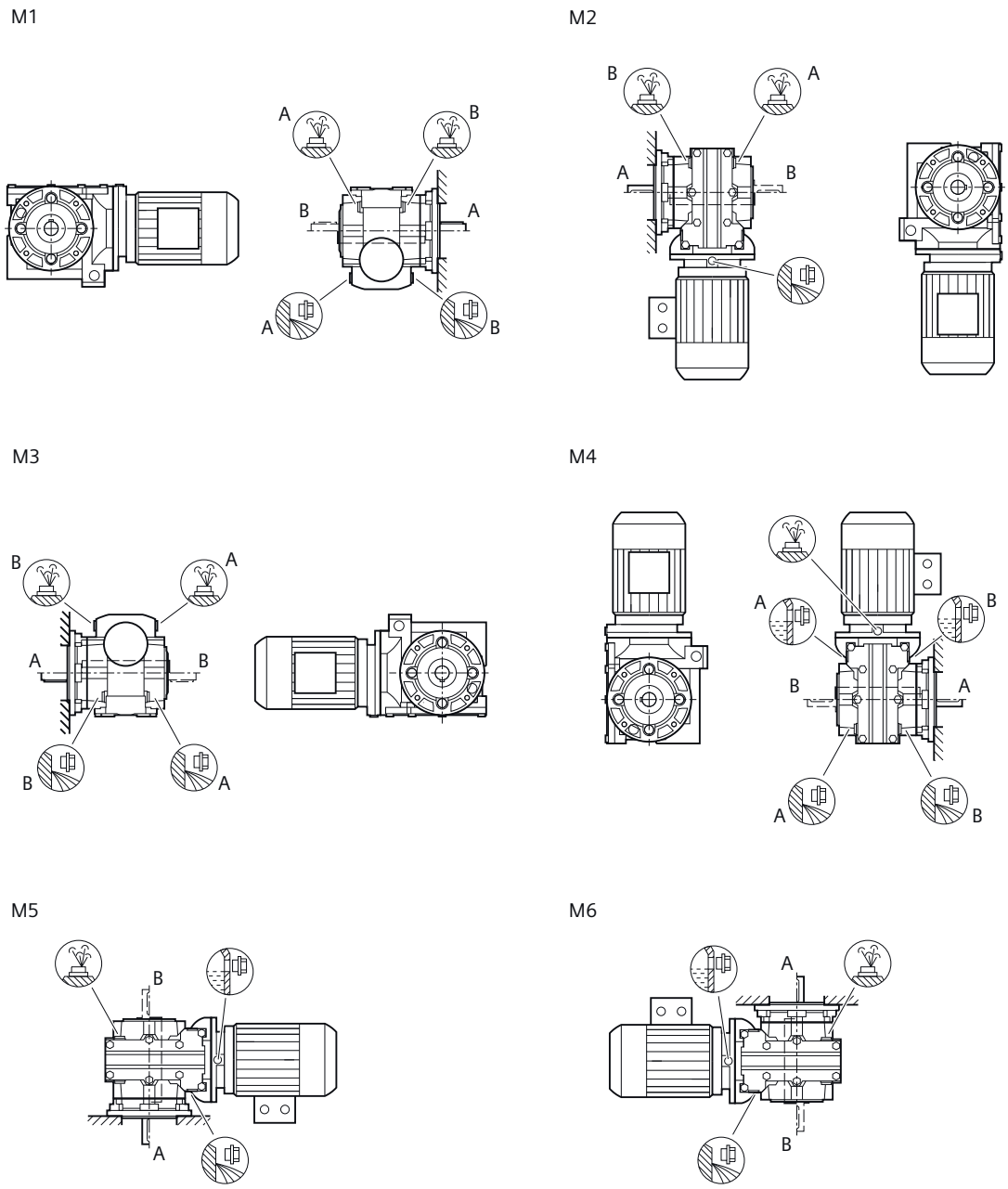

Figure 12-41 Mounting positions for helical worm gearbox CF flange-mounted design and CAZ housing flange, size 29

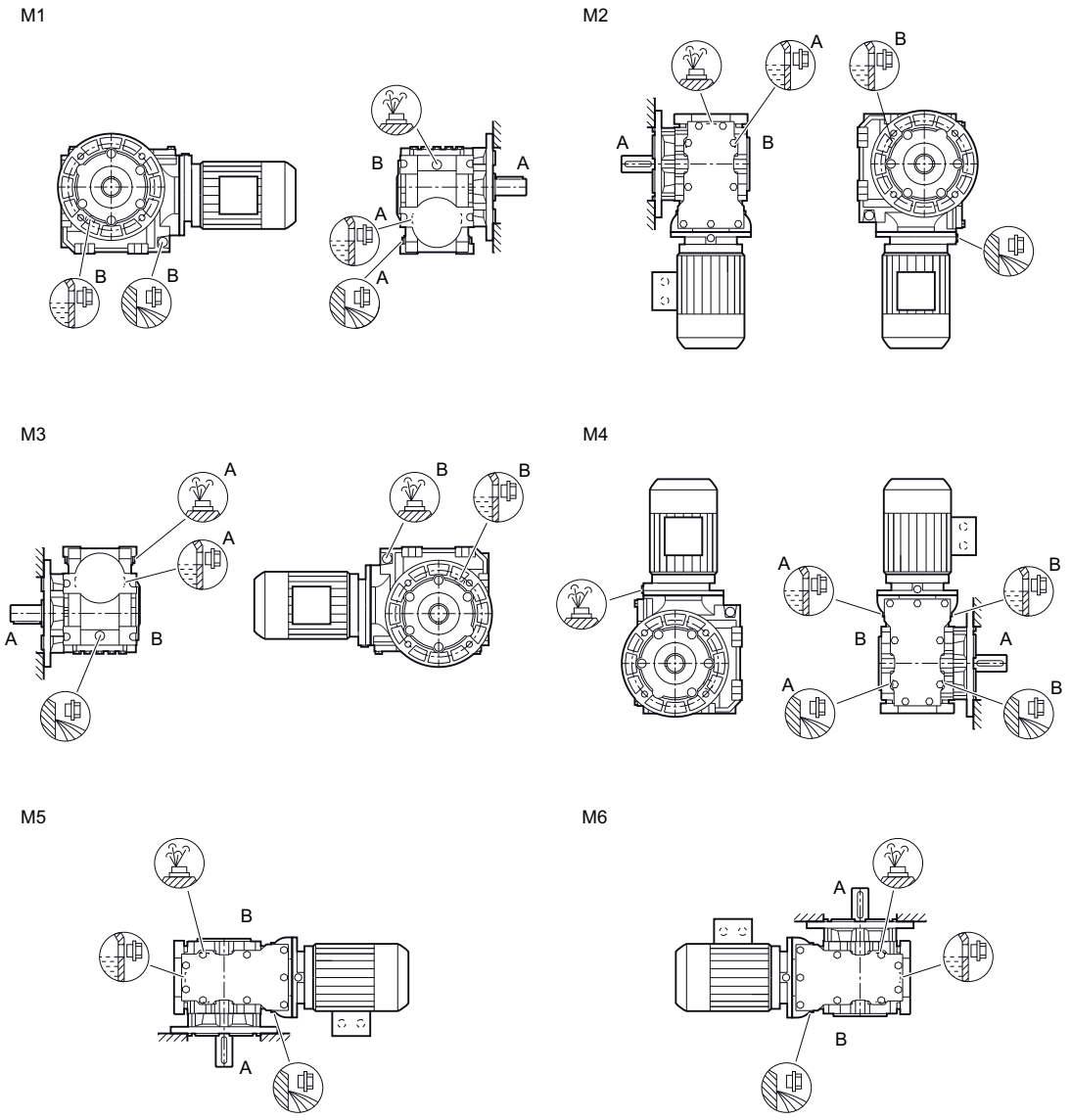

Figure 12-42 Mounting positions for helical worm gearbox CF flange-mounted design and CAZ housing flange, size 39A

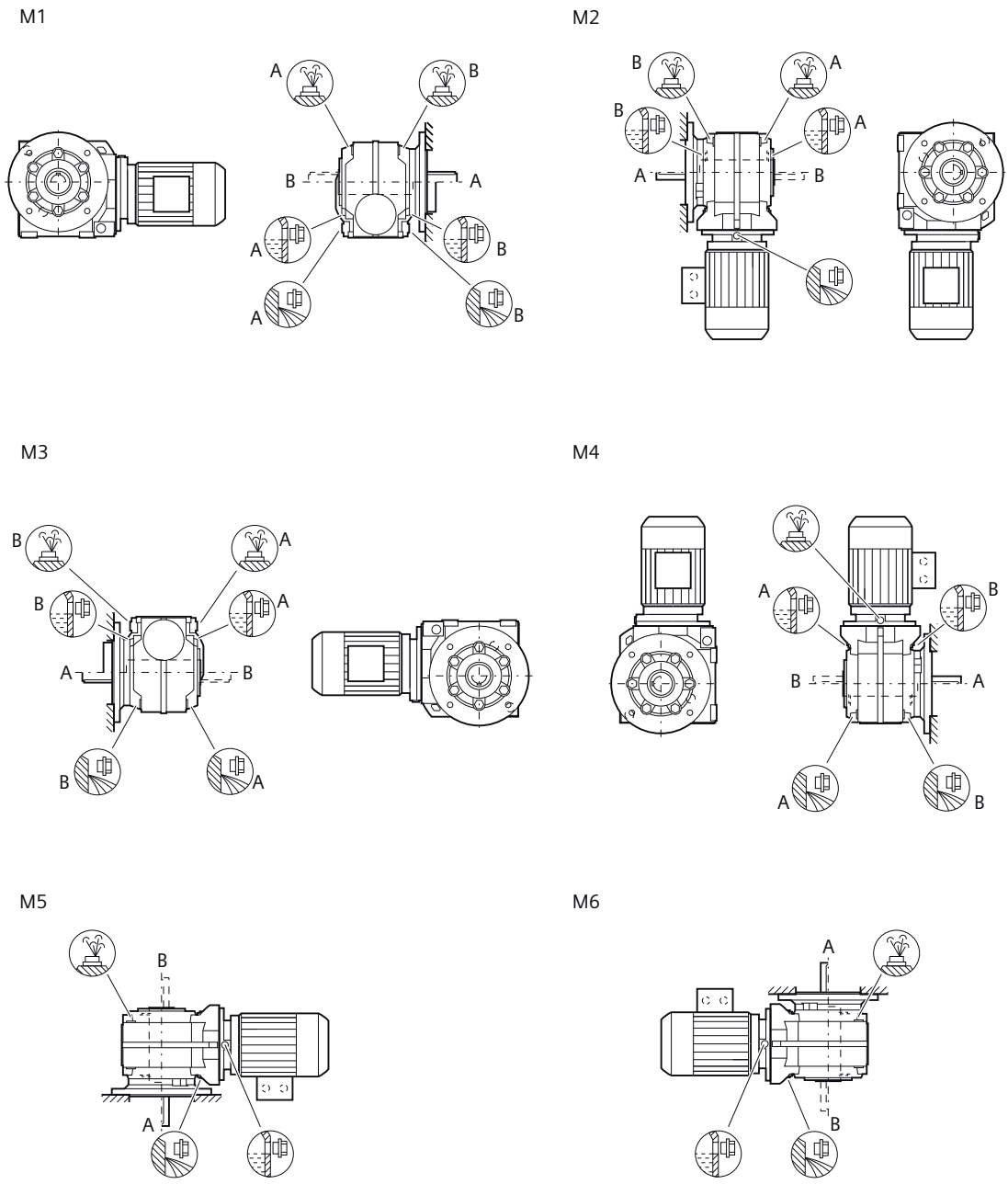

Figure 12-43 Mounting positions for helical worm gearbox CF flange-mounted design and CAZ housing flange, sizes 39 - 89

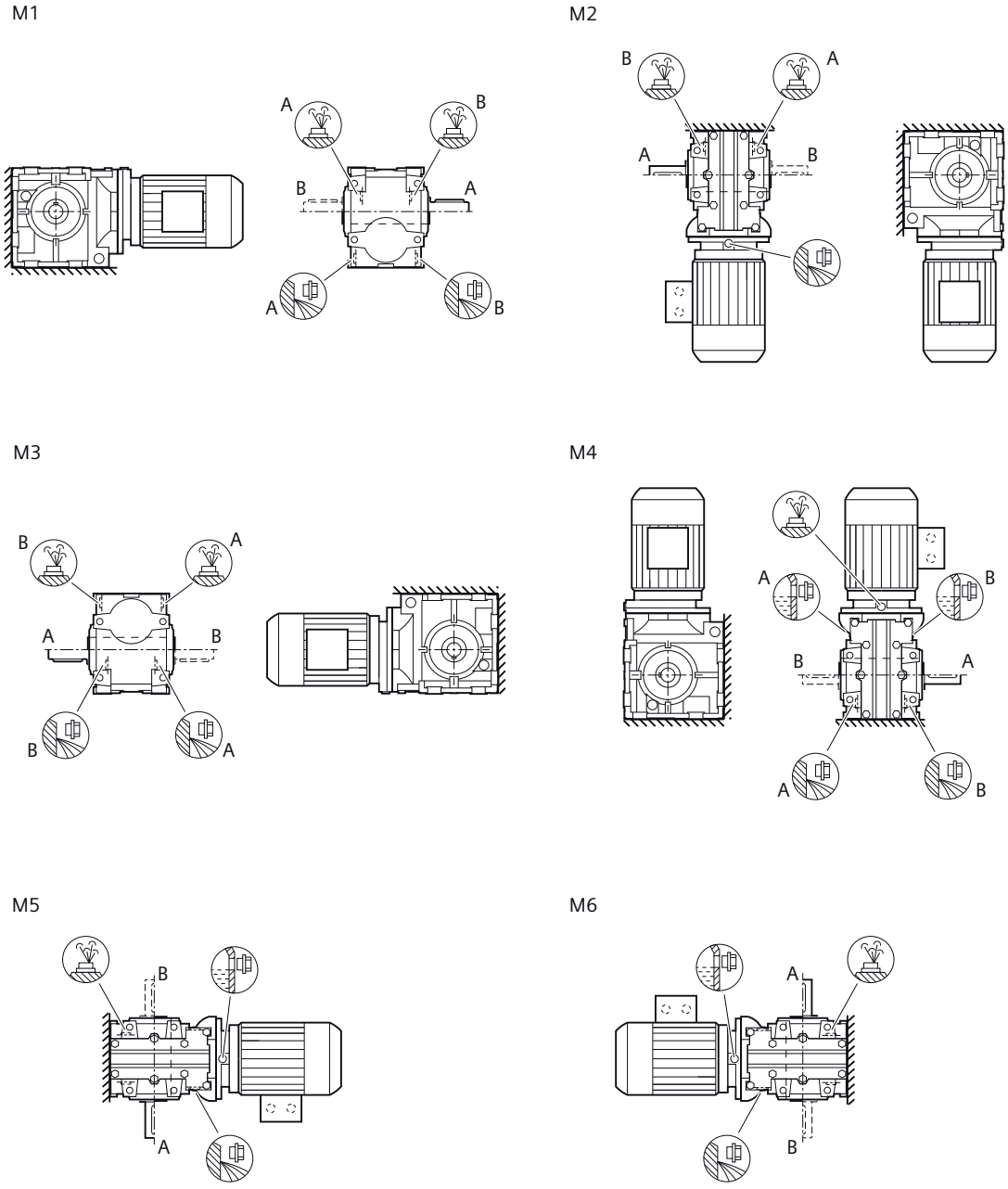

Figure 12-44 Mounting positions for helical worm gearbox C. foot-mounted design, size 29

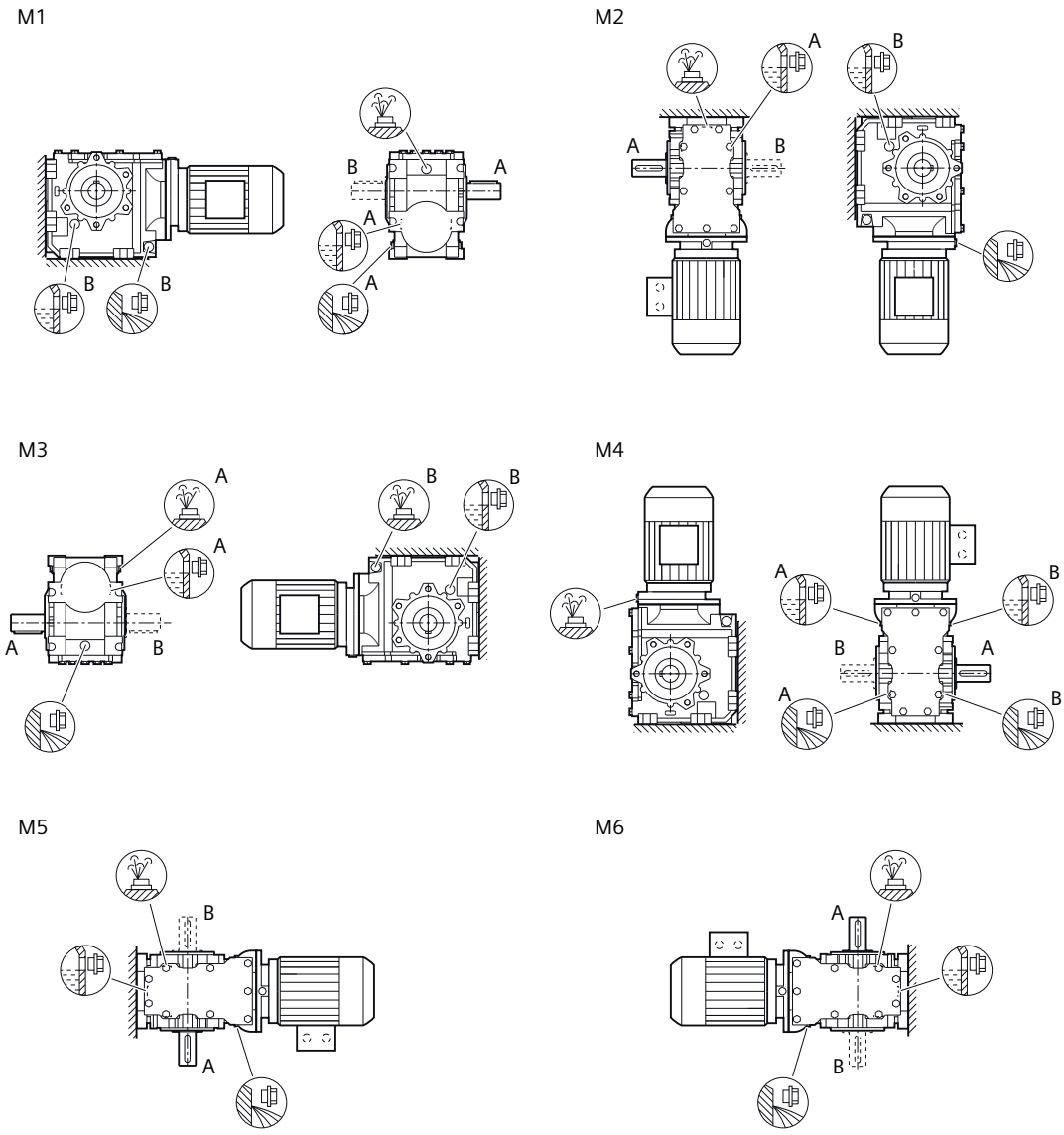

Figure 12-45 Mounting positions for helical worm gearbox C. foot-mounted design, size 39A

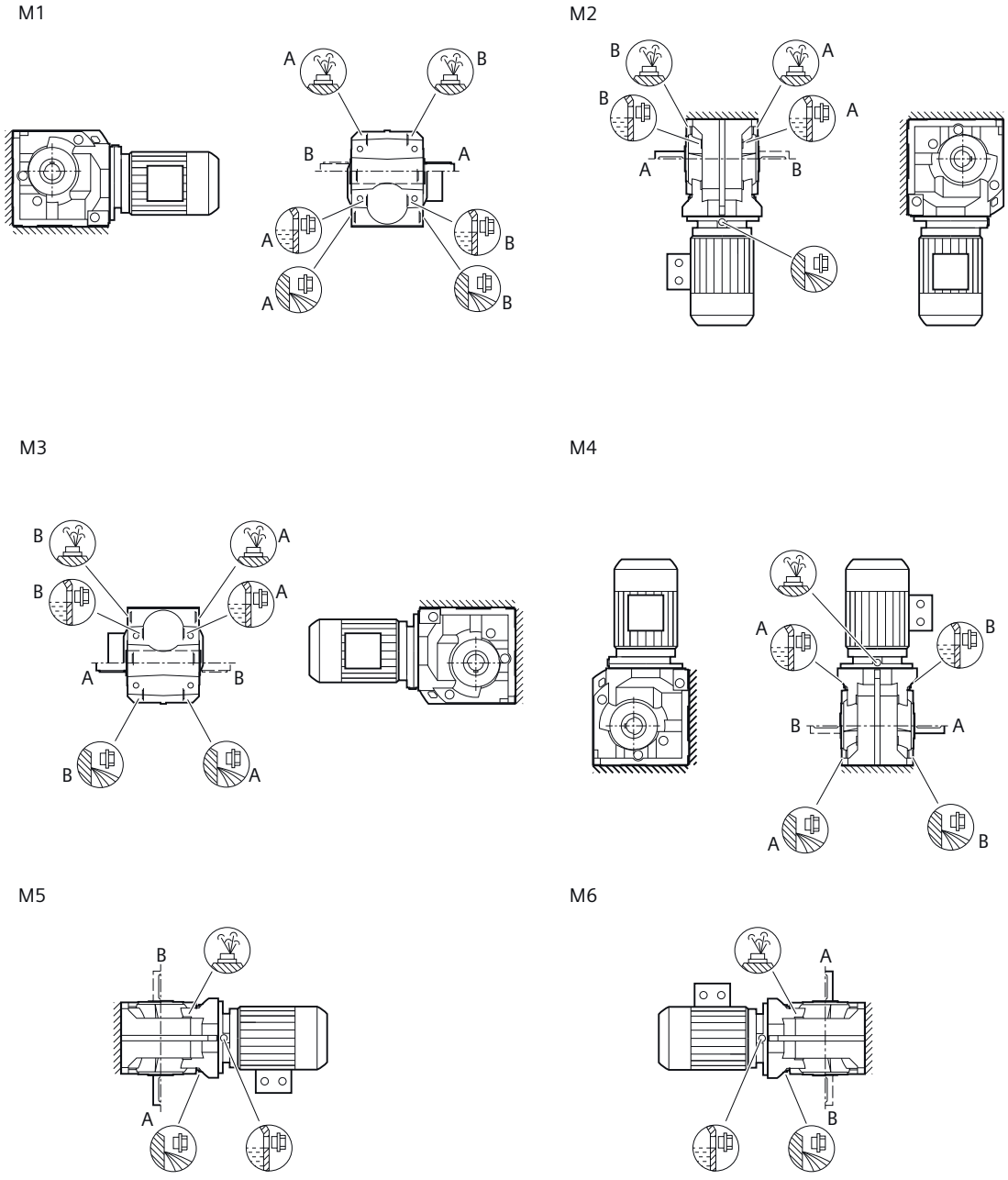

Figure 12-46 Mounting positions for helical worm gearbox C. foot-mounted design, sizes 39 - 89

12.7.7 Worm gearbox

Note

Gearboxes are lubricated for life. There are no openings to check the oil level.

The lubrication for life has been designed to enable the gearbox to be operated in all the frame sizes and mounting positions shown.

M0 is a universal mounting position. The geared motor can be installed in all mounting positions.

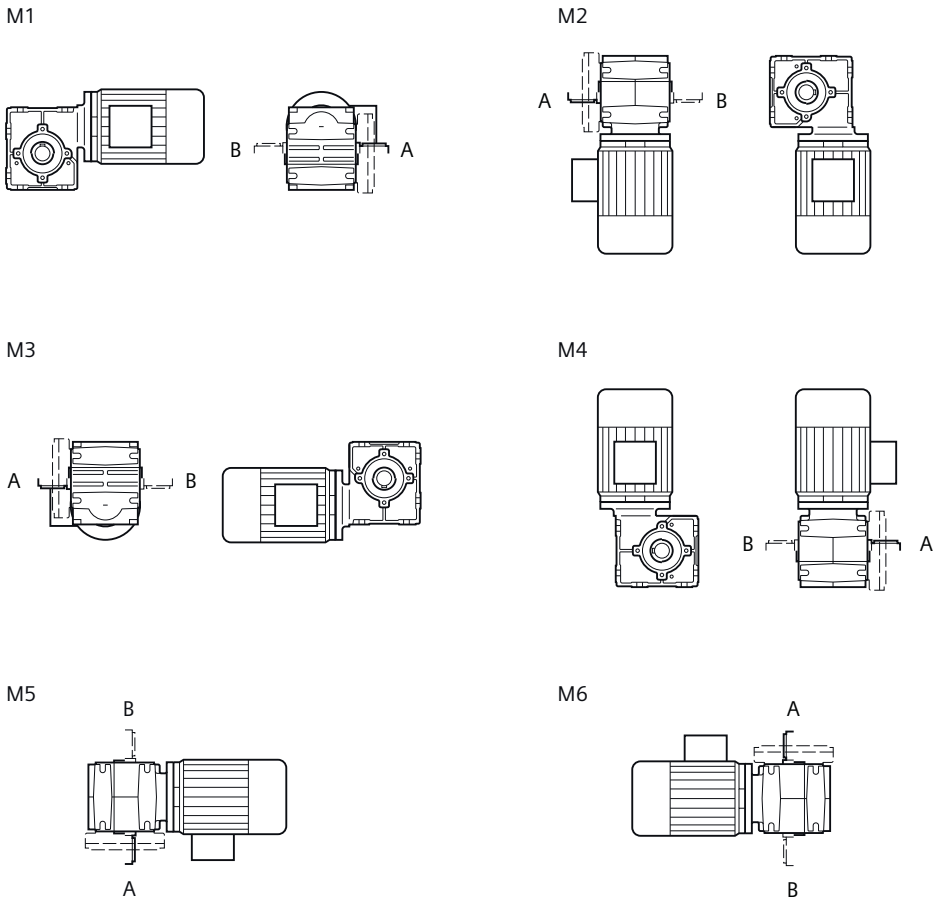

Figure 12-47 Mounting positions for worm gearbox S, frame size 09 - 29

12.7.8 Tandem gearbox/gearbox with slow input speed - intermediate helical gearbox or drive unit

Only operate the gearbox in the mounting position specified on the rating plate. This ensures that the correct quantity of lubricant is provided. The symbols are shown for the standard mounting position.

Note

Horizontal operating position

In a horizontal operating position the bulging part of the housing of the intermediate helical gearbox generally faces vertically downwards.

Note

Helical gearbox size 19

The helical gearbox size 19 is lubricated for life. There is no opening to check the oil level.

The gearboxes have a breather valve in vertical mounting positions.

Note

Tandem gearbox/gearbox with slow input speed

Tandem gearbox (a - main gearbox) is representative for a gearbox with slow input speed.

In some mounting positions, a higher oil level is required in order to adequately lubricate the bearings at the top.

Horizontal operating position

Vertical operating position

b: D/Z 19

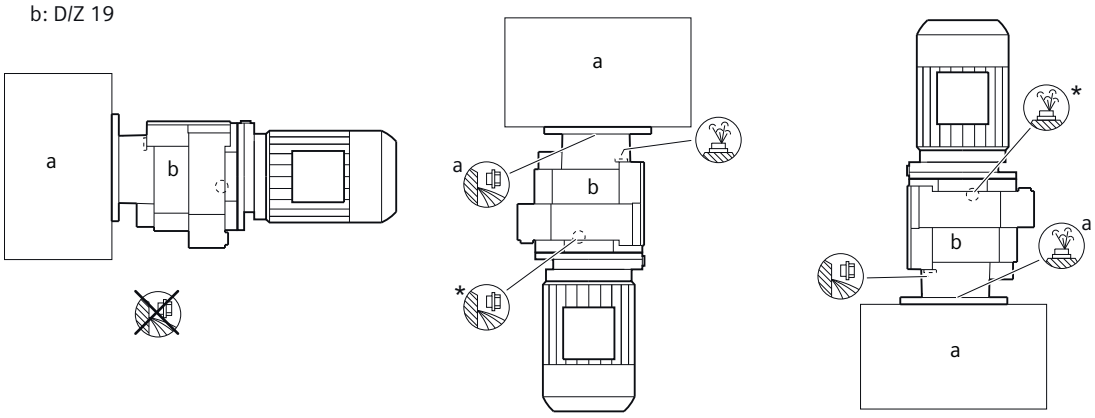

b: D/Z 39

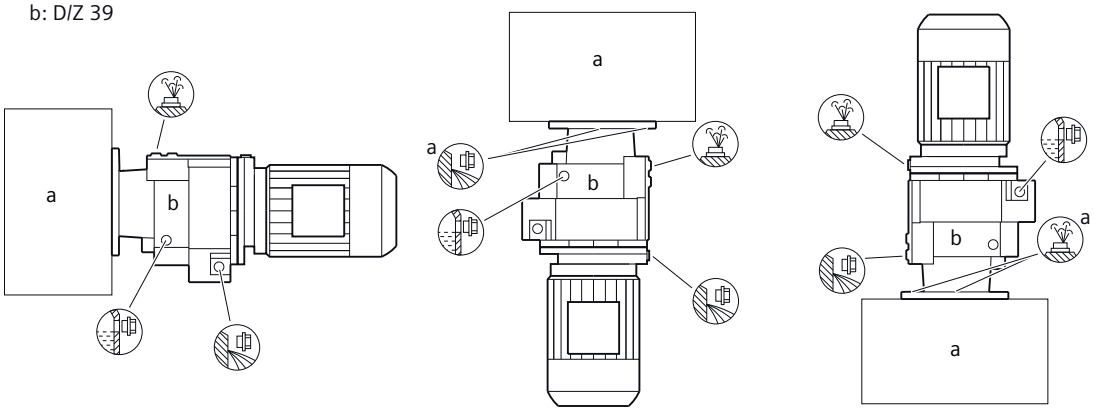

b: D/Z 49 - 69

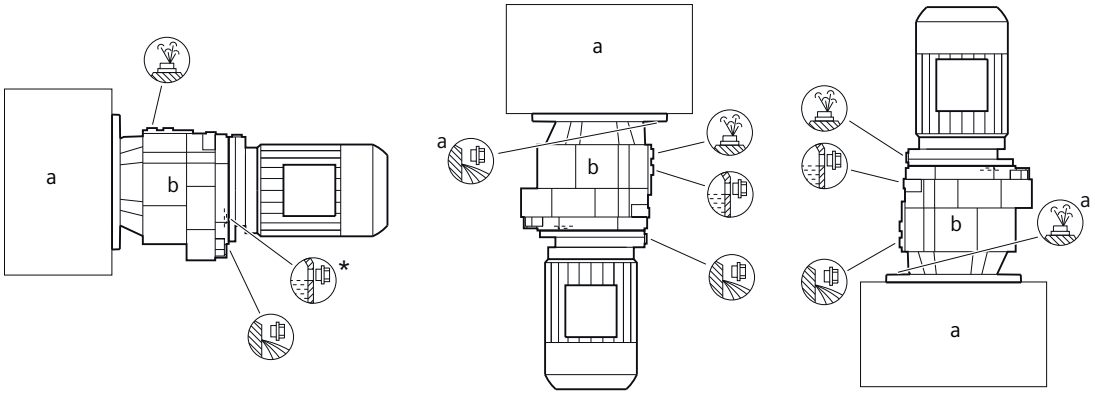

Operating position for tandem gearbox

a	Main gearbox
b	Intermediate helical gearbox or drive unit
*	On opposite side

12.8 Oil quantities

NOTICE

Damage to the gearbox caused by incorrect oil quantities

The oil quantities listed in the tables are guide values for changing the oil. They serve, for example, for lubricant storage and procurement.

The precise values depend on the number of stages and transmission ratio of the gearbox.

The specified oil quantities are valid for the standard mounting position.

Note

Tandem gearbox - intermediate helical gearbox

The oil quantity is specified for every individual gearbox and is valid for the standard mounting position.

Note

Gearbox in special mounting position

The gearbox is intended for a specific rotation angle and is delivered with the correct quantity of oil for this purpose.

You will find information regarding oil quantity and type of oil on the rating plate.

12.8.1 Helical gearbox

Table 12-4 Oil quantities in l for E, EZ, EF , sizes 39 - 149

Type	Mounting position					
	M1	M2	M3	M4	M5	M6
E.39	0.2	0.5	0.4	0.7	0.45	0.45
E.49	0.4	1	0.95	1.5	1	0.95
E.69	0.6	1.9	1.6	2.5	1.7	1.7
E.89	0.9	3.7	2.5	4	3	2.9
E.109	1.4	6.6	6	6.9	5.3	5.1
E.129	2.2	10.7	6.6	9.5	7.7	7.5
E.149	3.8	16	10.3	15.5	12	11.6

Table 12-5 Oil quantities in l for D/Z, DB/ZB, DF/ZF, DZ/ZZ, sizes 19 - 189

Type	Mounting position					
	M1	M2	M3	M4	M5	M6
D.19	0.15	0.45	0.45	0.45	0.4	0.3
D.29	0.15	0.65	0.45	0.5	0.55	0.4

Type	Mounting position					
	M1	M2	M3	M4	M5	M6
D.39	0.25	0.9	0.8	0.85	0.8	0.7
D.49	0.55	1.8	1.8	1.7	1.7	1.2
D.59	0.45	1.9	1.9	1.8	1.8	1.2
D.69	0.6	2	2.4	2.3	2.2	1.5
D.79	1	3.5	3.7	3.6	3.4	2.3
D.89	2	6.5	6.2	6	6	4.2
D.109	2.9	11.3	11.3	10	9.8	7.3
D.129	5.6	17.9	18.5	17.7	16.9	12.1
D.149	9.1	30.5	28.5	28.5	26	20.5
D.169	12.9	45	45	43.5	40.5	33
D.189	17.9	65	77	77	59	59
Z.19	0.15	0.5	0.45	0.5	0.4	0.35
Z.29	0.2	0.7	0.45	0.6	0.55	0.3
Z.39	0.3	0.95	0.85	0.95	0.9	0.25
Z.49	0.55	1.9	1.9	1.9	1.8	0.65
Z.59	0.65	2	1.9	1.9	1.9	0.6
Z.69	0.65	2.1	2.6	2.6	2.3	0.85
Z.79	1.1	3.8	3.9	3.9	3.7	1.4
Z.89	2.2	6.9	6.7	6.7	6.6	2.4
Z.109	3	12	12.3	11.3	10.7	4.6
Z.129	6	19	19.9	19.9	18.4	7.5
Z.149	9.4	32	31.5	32.5	29	12.2
Z.169	13.6	47.5	49	49.5	45	17.9
Z.189	18.9	67	79	80	61	36.5

12.8.2 Parallel shaft gearbox

Table 12-6 Oil quantities in l for FD/Z, FD/ZZ, FD/ZA., FD/ZAF., FD/ZAZ., FD/ZAD., sizes 29 - 189

Type	Mounting position					
	M1	M2	M3	M4	M5	M6
FD.29	0.6	0.8	0.35	0.6	0.45	0.45
FD.39	0.95	1.1	0.7	1.2	0.8	0.8
FD.49	2.1	2.3	1.5	2.3	1.5	1.5
FD.69	2.2	2.7	1.6	2.7	1.8	1.8
FD.79	3	3.8	2.7	3.9	2.6	2.7
FD.89	5.6	7.6	5.9	7.8	5.1	5.2
FD.109	9.5	13	9.2	11.8	8.5	8.5
FD.129	16.1	20	16.3	23.5	14.9	15
FD.149	24.5	32.5	23	34	21.5	22
FD.169	39	50	37	54	34.5	35.5

Type	Mounting position					
	M1	M2	M3	M4	M5	M6
FD.189	64	74	48	77	51.5	52
FZ.29	0.6	0.9	0.4	0.7	0.5	0.45
FZ.39	0.95	1.3	0.8	1.4	0.9	0.85
FZ.49	1.6	2.5	1.6	2.5	1.6	1.6
FZ.69	2.2	2.8	1.6	2.9	1.9	1.9
FZ.79	2.8	4.1	2.9	4.2	2.7	2.9
FZ.89	4.9	7.7	5.9	8.4	5.2	5.5
FZ.109	9.1	13.7	9.4	13.1	9	9.3
FZ.129	15.6	21.5	16.7	25	15.6	16.3
FZ.149	23.5	34	24	37	22.5	24
FZ.169	38	54	37.5	59	36.5	38.5
FZ.189	57	77	50	80	52.5	54

Table 12-7 Oil quantities in l for FD/ZF, sizes 29 - 189

Type	Mounting position					
	M1	M2	M3	M4	M5	M6
FDF29	0.6	0.8	0.35	0.6	0.45	0.45
FDF39	1	1.2	0.75	1.3	0.8	0.85
FDF49	2.2	2.3	1.5	2.4	1.6	1.5
FDF69	2.4	2.8	1.6	2.9	1.9	1.9
FDF79	3.1	3.9	2.7	4	2.7	2.6
FDF89	5.8	7.6	5.8	8	5.2	5.2
FDF109	9.7	13	9.2	12	8.6	8.6
FDF129	16.4	20	16.3	23.5	15.1	15.2
FDF149	25	32.5	23	35	22	22.5
FDF169	40.5	50	37	56	35.5	36.5
FDF189	66	74	48	79	53	53
FZF29	0.6	0.9	0.4	0.7	0.5	0.45
FZF39	1	1.4	0.85	1.6	0.95	0.9
FZF49	1.8	2.4	1.5	2.6	1.6	1.6
FZF69	2.4	2.9	1.6	3.1	2	2
FZF79	2.9	4.2	2.9	4.3	2.9	2.8
FZF89	5.1	7.7	5.8	8.6	5.3	5.4
FZF109	9.2	13.7	9.4	13.3	9.1	9.4
FZF129	16	21.5	16.7	25.5	15.8	16.5
FZF149	24	34	24	38	23	24.5
FZF169	39.5	54	37.5	61	37.5	39.5
FZF189	60	77	50	82	53.5	55

12.8.3 Bevel gearbox

Table 12-8 Oil quantities in l for B, sizes 19 - 49

Type	Mounting position					
	M1	M2	M3	M4	M5	M6
B.19	0.15	0.3	0.4	0.45	0.3	0.3
B.29	0.25	0.55	0.7	0.85	0.55	0.5
B.39	0.5	0.95	1.3	1.6	0.95	0.9
B.49	1	1.7	2.4	3.1	1.8	1.5

Table 12-9 Oil quantities in l for K, KA, KAS, KAT, sizes 39 - 189

Type	Mounting position					
	M1	M2	M3	M4	M5-A M6-B	M6-A M5-B
K.39	0.35	0.85	1.1	1.2	0.85	0.9
K.49	0.55	1.4	1.8	1.9	1.5	1.6
K.69	0.75	2	2.5	2.7	2.2	2.2
K.79	1	2.2	2.9	3.4	2.7	2.5
K.89	1.9	4.5	6	6.8	5	5.3
K.109	3	7.2	9.2	10.5	7.1	7.5
K.129	6.2	13.4	16.6	19.5	13.2	13.6
K.149	9.3	21	28	33	21.5	22.5
K.169	17	31	47	57.5	35.5	38.5
K.189	24.5	53	73	87	53.5	59

Table 12-10 Oil quantities in l for KZ, KAF., KAZ., KAD., sizes 39 - 189

Type	Mounting position					
	M1	M2	M3	M4	M5-A M6-B	M6-A M5-B
K.39	0.4	0.9	1.2	1.3	0.95	0.95
K.49	0.65	1.5	1.9	2.2	1.6	1.6
K.69	0.85	2.1	2.8	3.2	2.4	2.5
K.79	1.1	2.4	3.1	3.7	2.5	2.7
K.89	2.2	4.7	6.2	7.3	5.3	5.6
K.109	3.7	7.4	9	11.7	7.6	8.2
K.129	6.5	13.5	17.5	20.5	13.8	14.2
K.149	9.6	21.5	29	34.5	22.5	23.5
K.169	17	31	47	57.5	35.5	38.5
K.189	24.5	53	73	87	53.5	59

Table 12-11 Oil quantities in l for KF, sizes 39 - 189

Type	Mounting position					
	M1	M2	M3	M4	M5-A M6-B	M6-A M5-B
KF39	0.35	0.9	1.2	1.3	0.95	1
KF49	0.6	1.4	2	2.2	1.6	1.7
KF69	0.85	2	2.8	3.1	2.4	2.4
KF79	1.2	2.3	3.1	3.8	3	2.5
KF89	2.1	4.6	6.5	7.6	5.6	5.5
KF109	3.6	7.4	9.8	11.7	8.1	7.8
KF129	6.7	13.9	18.1	21.5	14.4	14.8
KF149	9.7	22	30.5	36	23	24
KF169	16.9	30.5	48.5	59.5	36.5	39
KF189	24.5	54	76	90	56	60

12.8.4 Helical worm gearbox

Table 12-12 Oil quantities in l for C, CA., CAS, CAT, sizes 29 - 89

Type	Mounting position					
	M1	M2	M3	M4	M5	M6
C.29	0.15	0.5	0.6	0.55	0.35	0.4
C.39A	0.2	0.91	0.79	0.78	0.46	0.48
C.39	0.3	1.1	0.95	1	0.55	0.6
C.49	0.55	1.8	1.7	1.8	1	1.1
C.69	0.75	2.6	2.6	2.9	1.6	1.7
C.89	1.2	4.2	4.8	5	2.8	2.9

Table 12-13 Oil quantities in l for CZ, CAF., CAZ., CAD., sizes 29 - 89

Type	Mounting position					
	M1	M2	M3	M4	M5	M6
C.29	0.15	0.5	0.55	0.5	0.35	0.35
C.39A	0.2	0.91	0.79	0.78	0.46	0.48
C.39	0.3	1.1	0.95	1	0.6	0.6
C.49	0.6	1.9	1.8	1.9	1.1	1.1
C.69	0.8	2.6	2.6	3	1.6	1.6
C.89	1.4	4.4	5	5.4	3	3

Table 12-14 Oil quantities in l for CF, sizes 29 - 89

Type	Mounting position					
	M1	M2	M3	M4	M5	M6
CF29	0.15	0.5	0.55	0.5	0.35	0.35
CF39A	0.2	0.96	0.84	0.78	0.51	0.48
CF39	0.3	1.2	1	1.1	0.65	0.65
CF49	0.6	2	1.9	2	1.2	1.2
CF69	0.8	2.6	2.6	3	1.6	1.6
CF89	1.4	4.4	5	5.4	3	3

12.8.5 Tandem gearbox/gearbox with slow input speed - intermediate helical gearbox or drive unit

12.8.5.1 Two- and three-stage helical gearboxes

Note

For gearbox "a" in mounting position M4, the oil level is above the oil level hole so that the higher bearings are lubricated.

Table 12-15 Oil quantity in l for D/Z, DB/ZB, DF/ZF, DZ/ZZ, sizes 29 - 189

Type	Mounting position					
	M1	M2	M3	M4	M5	M6
Z.29-Z19	0.2 + 0.15	0.7 + 0.5	0.45 + 0.15	0.6 + 0.5	0.55 + 0.15	0.3 + 0.15
Z.29-D19	0.2 + 0.15	0.7 + 0.45	0.45 + 0.15	0.6 + 0.45	0.55 + 0.15	0.3 + 0.15
D.29-D19	0.15 + 0.15	0.65 + 0.45	0.45 + 0.15	0.65 + 0.45	0.55 + 0.15	0.4 + 0.15
Z.39-Z19	0.3 + 0.15	0.95 + 0.5	0.85 + 0.15	0.95 + 0.5	0.9 + 0.15	0.25 + 0.15
Z.39-D19	0.3 + 0.15	0.95 + 0.45	0.85 + 0.15	0.95 + 0.45	0.9 + 0.15	0.25 + 0.15
D.39-D19	0.25 + 0.15	0.9 + 0.45	0.8 + 0.15	0.95 + 0.45	0.8 + 0.15	0.7 + 0.15
Z.49-Z19	0.55 + 0.15	1.9 + 0.5	1.9 + 0.15	2.3 + 0.5	1.8 + 0.15	0.65 + 0.15
Z.49-D19	0.55 + 0.15	1.9 + 0.45	1.9 + 0.15	2.3 + 0.45	1.8 + 0.15	0.65 + 0.15
D.49-Z19	0.55 + 0.15	1.8 + 0.5	1.8 + 0.15	2.1 + 0.5	1.7 + 0.15	1.2 + 0.15
D.49-D19	0.55 + 0.15	1.8 + 0.45	1.8 + 0.15	2.1 + 0.45	1.7 + 0.15	1.2 + 0.15
Z.59-Z19	0.65 + 0.15	2 + 0.5	1.9 + 0.15	2.3 + 0.5	1.9 + 0.15	0.6 + 0.15
Z.59-D19	0.65 + 0.15	2 + 0.45	1.9 + 0.15	2.3 + 0.45	1.9 + 0.15	0.6 + 0.15
D.59-Z19	0.45 + 0.15	1.9 + 0.5	1.9 + 0.15	2.1 + 0.5	1.8 + 0.15	1.2 + 0.15
D.59-D19	0.45 + 0.15	1.9 + 0.45	1.9 + 0.15	2.1 + 0.45	1.8 + 0.15	1.2 + 0.15
Z.69-Z19	0.65 + 0.15	2.1 + 0.5	2.6 + 0.15	2.9 + 0.5	2.3 + 0.15	0.85 + 0.15
Z.69-D19	0.65 + 0.15	2.1 + 0.45	2.6 + 0.15	2.9 + 0.45	2.3 + 0.15	0.85 + 0.15
D.69-Z19	0.6 + 0.15	2 + 0.5	2.4 + 0.15	2.7 + 0.5	2.2 + 0.15	1.5 + 0.15

Type	Mounting position					
	M1	M2	M3	M4	M5	M6
D.69-D19	0.6 + 0.15	2 + 0.45	2.4 + 0.15	2.7 + 0.45	2.2 + 0.15	1.5 + 0.15
Z.79-Z39	1.1 + 0.3	3.8 + 0.95	3.9 + 0.3	4.5 + 1	3.7 + 0.3	1.4 + 0.3
Z.79-D39	1.1 + 0.25	3.8 + 0.9	3.9 + 0.25	4.5 + 0.9	3.7 + 0.25	1.4 + 0.25
D.79-D39	1 + 0.25	3.5 + 0.9	3.7 + 0.25	4.2 + 0.9	3.4 + 0.25	2.3 + 0.25
Z.89-Z39	2.2 + 0.3	6.9 + 0.95	6.7 + 0.3	7.7 + 1	6.6 + 0.3	2.4 + 0.3
Z.89-D39	2.2 + 0.25	6.9 + 0.9	6.7 + 0.25	7.7 + 0.9	6.6 + 0.25	2.4 + 0.25
D.89-Z39	2 + 0.3	6.5 + 0.95	6.2 + 0.3	7.2 + 1	6 + 0.3	4.2 + 0.3
D.89-D39	2 + 0.25	6.5 + 0.9	6.2 + 0.25	7.2 + 0.9	6 + 0.25	4.2 + 0.25
D.109-Z39	2.9 + 0.3	11.3 + 0.95	11.3 + 0.3	12.1 + 1	9.8 + 0.3	7.3 + 0.3
D.109-D39	2.9 + 0.25	11.3 + 0.9	11.3 + 0.25	12.1 + 0.9	9.8 + 0.25	7.3 + 0.25
D.129-Z49	5.6 + 0.55	17.9 + 1.9	18.5 + 0.55	22.5 + 2.1	16.9 + 0.55	12.1 + 0.55
D.129-D49	5.6 + 0.55	17.9 + 1.8	18.5 + 0.55	22.5 + 1.9	16.9 + 0.55	12.1 + 0.55
D.149-Z49	9.1 + 0.55	30.5 + 1.9	28.5 + 0.55	34 + 2.1	26 + 0.55	20.5 + 0.55
D.149-D49	9.1 + 0.55	30.5 + 1.8	28.5 + 0.55	34 + 1.9	26 + 0.55	20.5 + 0.55
D.169-Z69	12.9 + 0.65	45 + 2.1	45 + 0.65	54 + 2.95	40.5 + 0.65	33 + 0.65
D.169-D69	12.9 + 0.6	45 + 2	45 + 0.6	54 + 2.65	40.5 + 0.6	33 + 0.6
D.189-Z69	17.9 + 0.65	65 + 2.1	77 + 0.65	87 + 2.95	59 + 0.65	59 + 0.65
D.189-D69	17.9 + 0.6	65 + 2	77 + 0.6	87 + 2.65	59 + 0.6	59 + 0.6

12.8.5.2 Parallel shaft gearboxes

Note

For gearbox "a" in mounting position M4, the oil level is above the oil level hole so that the higher bearings are lubricated.

Table 12-16 Oil quantities in l for FD/Z, FD/ZZ, FD/ZA., FD/ZAF., FD/ZAZ., FD/ZAD., sizes 29 - 189

Type	Mounting position					
	M1	M2	M3	M4	M5	M6
FZ.29-Z19	0.6 + 0.15	0.9 + 0.5	0.4 + 0.15	0.85 + 0.5	0.5 + 0.15	0.45 + 0.15
FZ.29-D19	0.6 + 0.15	0.9 + 0.45	0.4 + 0.15	0.85 + 0.45	0.5 + 0.15	0.45 + 0.15
FD.29-D19	0.6 + 0.15	0.8 + 0.45	0.35 + 0.15	0.75 + 0.45	0.45 + 0.15	0.6 + 0.15
FZ.39-Z19	0.95 + 0.15	1.3 + 0.5	0.8 + 0.15	1.6 + 0.5	0.9 + 0.15	0.85 + 0.15
FZ.39-D19	0.95 + 0.15	1.3 + 0.45	0.8 + 0.15	1.6 + 0.45	0.9 + 0.15	0.85 + 0.15
FD.39-D19	0.95 + 0.15	1.1 + 0.45	0.7 + 0.15	1.4 + 0.45	0.8 + 0.15	1 + 0.15
FZ.49-Z19	1.6 + 0.15	2.5 + 0.5	1.6 + 0.15	3 + 0.5	1.6 + 0.15	1.6 + 0.15
FZ.49-D19	1.6 + 0.15	2.5 + 0.45	1.6 + 0.15	3 + 0.45	1.6 + 0.15	1.6 + 0.15
FD.49-Z19	2.1 + 0.15	2.3 + 0.5	1.5 + 0.15	2.8 + 0.5	1.5 + 0.15	1.8 + 0.15
FD.49-D19	2.1 + 0.15	2.3 + 0.45	1.5 + 0.15	2.8 + 0.45	1.5 + 0.15	1.8 + 0.15

Type	Mounting position					
	M1	M2	M3	M4	M5	M6
FZ.69-Z19	2.2 + 0.15	2.8 + 0.5	1.6 + 0.15	3.4 + 0.5	1.9 + 0.15	1.9 + 0.15
FZ.69-D19	2.2 + 0.15	2.8 + 0.45	1.6 + 0.15	3.4 + 0.45	1.9 + 0.15	1.9 + 0.15
FD.69-Z19	2.2 + 0.15	2.7 + 0.5	1.6 + 0.15	3.2 + 0.5	1.8 + 0.15	2.2 + 0.15
FD.69-D19	2.2 + 0.15	2.7 + 0.45	1.6 + 0.15	3.2 + 0.45	1.8 + 0.15	2.2 + 0.15
FZ.79-Z39	2.8 + 0.3	4.1 + 0.95	2.9 + 0.3	4.9 + 1	2.7 + 0.3	2.9 + 0.3
FZ.79-D39	2.8 + 0.25	4.1 + 0.9	2.9 + 0.25	4.9 + 0.9	2.7 + 0.25	2.9 + 0.25
FD.79-D39	3 + 0.25	3.8 + 0.9	2.7 + 0.25	4.6 + 0.9	2.6 + 0.25	3.1 + 0.25
FZ.89-Z39	4.9 + 0.3	7.7 + 0.95	5.9 + 0.3	9.6 + 1	5.2 + 0.3	5.5 + 0.3
FZ.89-D39	4.9 + 0.25	7.7 + 0.9	5.9 + 0.25	9.6 + 0.9	5.2 + 0.25	5.5 + 0.25
FD.89-Z39	5.6 + 0.3	7.6 + 0.95	5.9 + 0.3	9 + 1	5.1 + 0.3	5.9 + 0.3
FD.89-D39	5.6 + 0.25	7.6 + 0.9	5.9 + 0.25	9 + 0.9	5.1 + 0.25	5.9 + 0.25
FD.109-Z39	9.5 + 0.3	13 + 0.95	9.2 + 0.3	14.8 + 1	8.5 + 0.3	10.4 + 0.3
FD.109-D39	9.5 + 0.25	13 + 0.9	9.2 + 0.25	14.8 + 0.9	8.5 + 0.25	10.4 + 0.25
FD.129-Z49	16.1 + 0.55	20 + 1.9	16.3 + 0.55	28 + 2.1	14.9 + 0.55	17.9 + 0.55
FD.129-D49	16.1 + 0.55	20 + 1.8	16.3 + 0.55	28 + 1.9	14.9 + 0.55	17.9 + 0.55
FD.149-Z49	24.5 + 0.55	32.5 + 1.9	23 + 0.55	41 + 2.1	21.5 + 0.55	26.5 + 0.55
FD.149-D49	24.5 + 0.55	32.5 + 1.8	23 + 0.55	41 + 1.9	21.5 + 0.55	26.5 + 0.55
FD.169-Z69	39 + 0.65	50 + 2.1	37 + 0.65	66 + 2.95	34.5 + 0.65	42.3 + 0.65
FD.169-D69	39 + 0.6	50 + 2	37 + 0.6	66 + 2.65	34.5 + 0.6	42.3 + 0.6
FD.189-Z69	64 + 0.65	74 + 2.1	48 + 0.65	93 + 2.95	51.5 + 0.65	60.7 + 0.65
FD.189-D69	64 + 0.6	74 + 2	48 + 0.6	93 + 2.65	51.5 + 0.6	60.7 + 0.6

Table 12-17 Oil quantities in l for FD/ZF, sizes 29 - 189

Type	Mounting position					
	M1	M2	M3	M4	M5	M6
FZF29-Z19	0.6 + 0.15	0.9 + 0.5	0.4 + 0.15	0.85 + 0.5	0.5 + 0.15	0.45 + 0.15
FZF29-D19	0.6 + 0.15	0.9 + 0.45	0.4 + 0.15	0.85 + 0.45	0.5 + 0.15	0.45 + 0.15
FDF29-D19	0.6 + 0.15	0.8 + 0.45	0.35 + 0.15	0.75 + 0.45	0.45 + 0.15	0.6 + 0.15
FZF39-Z19	1 + 0.15	1.4 + 0.5	0.85 + 0.15	1.8 + 0.5	0.95 + 0.15	0.9 + 0.15
FZF39-D19	1 + 0.15	1.4 + 0.45	0.85 + 0.15	1.8 + 0.45	0.95 + 0.15	0.9 + 0.15
FDF39-D19	1 + 0.15	1.2 + 0.45	0.75 + 0.15	1.5 + 0.45	0.8 + 0.15	1.05 + 0.15
FZF49-Z19	1.8 + 0.15	2.4 + 0.5	1.5 + 0.15	3.2 + 0.5	1.6 + 0.15	1.6 + 0.15
FZF49-D19	1.8 + 0.15	2.4 + 0.45	1.5 + 0.15	3.2 + 0.45	1.6 + 0.15	1.6 + 0.15
FDF49-Z19	2.2 + 0.15	2.3 + 0.5	1.5 + 0.15	3 + 0.5	1.6 + 0.15	1.8 + 0.15
FDF49-D19	2.2 + 0.15	2.3 + 0.45	1.5 + 0.15	3 + 0.45	1.6 + 0.15	1.8 + 0.15
FZF69-Z19	2.4 + 0.15	2.9 + 0.5	1.6 + 0.15	3.6 + 0.5	2 + 0.15	2 + 0.15
FZF69-D19	2.4 + 0.15	2.9 + 0.45	1.6 + 0.15	3.6 + 0.45	2 + 0.15	2 + 0.15
FDF69-Z19	2.4 + 0.15	2.8 + 0.5	1.6 + 0.15	3.4 + 0.5	1.9 + 0.15	2.3 + 0.15
FDF69-D19	2.4 + 0.15	2.8 + 0.45	1.6 + 0.15	3.4 + 0.45	1.9 + 0.15	2.3 + 0.15
FZF79-Z39	2.9 + 0.3	4.2 + 0.95	2.9 + 0.3	5 + 1	2.9 + 0.3	2.8 + 0.3

Type	Mounting position					
	M1	M2	M3	M4	M5	M6
FZF79-D39	2.9 + 0.25	4.2 + 0.9	2.9 + 0.25	5 + 0.9	2.9 + 0.25	2.8 + 0.25
FDF79-D39	3.1 + 0.25	3.9 + 0.9	2.7 + 0.25	4.7 + 0.9	2.7 + 0.25	3.0 + 0.25
FZF89-Z39	5.1 + 0.3	7.7 + 0.95	5.8 + 0.3	9.8 + 1	5.3 + 0.3	5.4 + 0.3
FZF89-D39	5.1 + 0.25	7.7 + 0.9	5.8 + 0.25	9.8 + 0.9	5.3 + 0.25	5.4 + 0.25
FDF89-Z39	5.8 + 0.3	7.6 + 0.95	5.8 + 0.3	9.2 + 1	5.2 + 0.3	5.9 + 0.3
FDF89-D39	5.8 + 0.25	7.6 + 0.9	5.8 + 0.25	9.2 + 0.9	5.2 + 0.25	5.9 + 0.25
FDF109-Z39	9.7 + 0.3	13 + 0.95	9.2 + 0.3	15 + 1	8.6 + 0.3	10.5 + 0.3
FDF109-D39	9.7 + 0.25	13 + 0.9	9.2 + 0.25	15 + 0.9	8.6 + 0.25	10.5 + 0.25
FDF129-Z49	16.4 + 0.55	20 + 1.9	16.3 + 0.55	28.5 + 2.1	15.1 + 0.55	18.5 + 0.55
FDF129-D49	16.4 + 0.55	20 + 1.8	16.3 + 0.55	28.5 + 1.9	15.1 + 0.55	18.5 + 0.55
FDF149-Z49	25 + 0.55	32.5 + 1.9	23 + 0.55	41.5 + 2.1	22 + 0.55	27 + 0.55
FDF149-D49	25 + 0.55	32.5 + 1.8	23 + 0.55	41.5 + 1.9	22 + 0.55	27 + 0.55
FDF169-Z69	40.5 + 0.65	50 + 2.1	37 + 0.65	68 + 2.95	35.5 + 0.65	43.3 + 0.65
FDF169-D69	40.5 + 0.6	50 + 2	37 + 0.6	68 + 2.65	35.5 + 0.6	43.3 + 0.6
FDF189-Z69	66 + 0.65	74 + 2.1	48 + 0.65	95 + 2.95	53 + 0.65	61.7 + 0.65
FDF189-D69	66 + 0.6	74 + 2	48 + 0.6	95 + 2.65	53 + 0.6	61.7 + 0.6

12.8.5.3 Bevel gearbox

Note

For gearbox "a" in mounting position M4, the oil level is above the oil level hole so that the higher bearings are lubricated.

Table 12-18 Oil quantities in l for K, KA, KAS, KAT, sizes 39 - 189

Type	Mounting position					
	M1	M2	M3	M4	M5	M6
K.39-Z19	0.35 + 0.15	0.85 + 0.5	1.1 + 0.15	1.3 + 0.5	0.85 + 0.15	0.9 + 0.15
K.49-Z19	0.55 + 0.15	1.4 + 0.5	1.8 + 0.15	2.2 + 0.5	1.5 + 0.15	1.6 + 0.15
K.69-Z19	0.75 + 0.15	2 + 0.5	2.5 + 0.15	3 + 0.5	2.2 + 0.15	2.2 + 0.15
K.79-Z39	1 + 0.3	2.2 + 0.95	2.9 + 0.3	3.7 + 1	2.7 + 0.3	2.5 + 0.3
K.89-Z39	1.9 + 0.3	4.5 + 0.95	6 + 0.3	7.3 + 1	5 + 0.3	5.3 + 0.3
K.109-Z39	3 + 0.3	7.2 + 0.95	9.2 + 0.3	11.6 + 1	7.1 + 0.3	7.5 + 0.3
K.129-Z39	6.2 + 0.3	13.4 + 0.95	16.6 + 0.3	21.5 + 1	13.2 + 0.3	13.6 + 0.3
K.149-Z49	9.3 + 0.55	21 + 1.9	28 + 0.55	36 + 2.1	21.5 + 0.55	22.5 + 0.55
K.169-Z49	17 + 0.55	31 + 1.9	47 + 0.55	63 + 2.1	35.5 + 0.55	38.5 + 0.55
K.189-Z69	24.5 + 0.65	53 + 2.1	73 + 0.65	94 + 2.95	53.5 + 0.65	59 + 0.65
K.39-D19	0.35 + 0.15	0.85 + 0.45	1.1 + 0.15	1.3 + 0.45	0.85 + 0.15	0.9 + 0.15
K.49-D19	0.55 + 0.15	1.4 + 0.45	1.8 + 0.15	2.2 + 0.45	1.5 + 0.15	1.6 + 0.15

Type	Mounting position					
	M1	M2	M3	M4	M5	M6
K.69-D19	0.75 + 0.15	2 + 0.45	2.5 + 0.15	3 + 0.45	2.2 + 0.15	2.2 + 0.15
K.79-D39	1 + 0.25	2.2 + 0.9	2.9 + 0.25	3.7 + 0.9	2.7 + 0.25	2.5 + 0.25
K.89-D39	1.9 + 0.25	4.5 + 0.9	6 + 0.25	7.3 + 0.9	5 + 0.25	5.3 + 0.25
K.109-D39	3 + 0.25	7.2 + 0.9	9.2 + 0.25	11.6 + 0.9	7.1 + 0.25	7.5 + 0.25
K.129-D39	6.2 + 0.25	13.4 + 0.9	16.6 + 0.25	21.5 + 0.9	13.2 + 0.25	13.6 + 0.25
K.149-D49	9.3 + 0.55	21 + 1.8	28 + 0.55	36 + 1.9	21.5 + 0.55	22.5 + 0.55
K.169-D49	17 + 0.55	31 + 1.8	47 + 0.55	63 + 1.9	35.5 + 0.55	38.5 + 0.55
K.189-D69	24.5 + 0.6	53 + 2	73 + 0.6	94 + 2.65	53.5 + 0.6	59 + 0.6

Table 12-19 Oil quantities in l for KZ, KAF., KAZ., KAD., sizes 39 - 189

Type	Type of construction					
	M1	M2	M3	M4	M5	M6
K.39-Z19	0.4 + 0.15	0.9 + 0.5	1.2 + 0.15	1.4 + 0.5	0.95 + 0.15	0.95 + 0.15
K.49-Z19	0.65 + 0.15	1.5 + 0.5	1.9 + 0.15	2.4 + 0.5	1.6 + 0.15	1.6 + 0.15
K.69-Z19	0.85 + 0.15	2.1 + 0.5	2.8 + 0.15	3.4 + 0.5	2.4 + 0.15	2.5 + 0.15
K.79-Z39	1.1 + 0.3	2.4 + 0.95	3.1 + 0.3	4 + 1	2.5 + 0.3	2.7 + 0.3
K.89-Z39	2.2 + 0.3	4.7 + 0.95	6.2 + 0.3	7.8 + 1	5.3 + 0.3	5.6 + 0.3
K.109-Z39	3.7 + 0.3	7.4 + 0.95	9 + 0.3	12.8 + 1	7.6 + 0.3	8.2 + 0.3
K.129-Z39	6.5 + 0.3	13.5 + 0.95	17.5 + 0.3	23 + 1	13.8 + 0.3	14.2 + 0.3
K.149-Z49	9.6 + 0.55	21.5 + 1.9	29 + 0.55	37.5 + 2.1	22.5 + 0.55	23.5 + 0.55
K.169-Z49	17 + 0.55	31 + 1.9	47 + 0.55	63 + 2.1	35.5 + 0.55	38.5 + 0.55
K.189-Z69	24.5 + 0.65	53 + 2.1	73 + 0.65	94 + 2.95	53.5 + 0.65	59 + 0.65
K.39-D19	0.4 + 0.15	0.9 + 0.45	1.2 + 0.15	1.4 + 0.45	0.95 + 0.15	0.95 + 0.15
K.49-D19	0.65 + 0.15	1.5 + 0.45	1.9 + 0.15	2.4 + 0.45	1.6 + 0.15	1.6 + 0.15
K.69-D19	0.85 + 0.15	2.1 + 0.45	2.8 + 0.15	3.4 + 0.45	2.4 + 0.15	2.5 + 0.15
K.79-D39	1.1 + 0.25	2.4 + 0.9	3.1 + 0.25	4 + 0.9	2.5 + 0.25	2.7 + 0.25
K.89-D39	2.2 + 0.25	4.7 + 0.9	6.2 + 0.25	7.8 + 0.9	5.3 + 0.25	5.6 + 0.25
K.109-D39	3.7 + 0.25	7.4 + 0.9	9 + 0.25	12.8 + 0.9	7.6 + 0.25	8.2 + 0.25
K.129-D39	6.5 + 0.25	13.5 + 0.9	17.5 + 0.25	23 + 0.9	13.8 + 0.25	14.2 + 0.25
K.149-D49	9.6 + 0.55	21.5 + 1.8	29 + 0.55	37.5 + 1.9	22.5 + 0.55	23.5 + 0.55
K.169-D49	17 + 0.55	31 + 1.8	47 + 0.55	63 + 1.9	35.5 + 0.55	38.5 + 0.55
K.189-D69	24.5 + 0.6	53 + 2	73 + 0.6	94 + 2.65	53.5 + 0.6	59 + 0.6

Table 12-20 Oil quantities in l for KF, sizes 39 - 189

Type	Type of construction					
	M1	M2	M3	M4	M5	M6
KF39-Z19	0.35 + 0.15	0.9 + 0.5	1.2 + 0.15	1.5 + 0.5	0.95 + 0.15	1 + 0.15
KF49-Z19	0.6 + 0.15	1.4 + 0.5	2 + 0.15	2.4 + 0.5	1.6 + 0.15	1.7 + 0.15
KF69-Z19	0.85 + 0.15	2 + 0.5	2.8 + 0.15	3.4 + 0.5	2.4 + 0.15	2.4 + 0.15

Type	Type of construction					
	M1	M2	M3	M4	M5	M6
KF79-Z39	1.2 + 0.3	2.3 + 0.95	3.1 + 0.3	4.1 + 1	3 + 0.3	2.5 + 0.3
KF89-Z39	2.1 + 0.3	4.6 + 0.95	6.5 + 0.3	8 + 1	5.6 + 0.3	5.5 + 0.3
KF109-Z39	3.6 + 0.3	7.4 + 0.95	9.8 + 0.3	12.8 + 1	8.1 + 0.3	7.8 + 0.3
KF129-Z39	6.7 + 0.3	13.9 + 0.95	18.1 + 0.3	24 + 1	14.4 + 0.3	14.8 + 0.3
KF149-Z49	9.7 + 0.55	22 + 1.9	30.5 + 0.55	39 + 2.1	23 + 0.55	24 + 0.55
KF169-Z49	16.9 + 0.55	30.5 + 1.9	48.5 + 0.55	64 + 2.1	36.5 + 0.55	39 + 0.55
KF189-Z69	24.5 + 0.65	54 + 2.1	76 + 0.65	98 + 2.95	56 + 0.65	60 + 0.65
KF39-Z19	0.35 + 0.15	0.9 + 0.45	1.2 + 0.15	1.5 + 0.45	0.95 + 0.15	1 + 0.15
KF49-Z19	0.6 + 0.15	1.4 + 0.45	2 + 0.15	2.4 + 0.45	1.6 + 0.15	1.7 + 0.15
KF69-Z19	0.85 + 0.15	2 + 0.45	2.8 + 0.15	3.4 + 0.45	2.4 + 0.15	2.4 + 0.15
KF79-Z39	1.2 + 0.25	2.3 + 0.9	3.1 + 0.25	4.1 + 0.9	3 + 0.25	2.5 + 0.25
KF89-Z39	2.1 + 0.25	4.6 + 0.9	6.5 + 0.25	8 + 0.9	5.6 + 0.25	5.5 + 0.25
KF109-Z39	3.6 + 0.25	7.4 + 0.9	9.8 + 0.25	12.8 + 0.9	8.1 + 0.25	7.8 + 0.25
KF129-Z39	6.7 + 0.25	13.9 + 0.9	18.1 + 0.25	24 + 0.9	14.4 + 0.25	14.8 + 0.25
KF149-Z49	9.7 + 0.55	22 + 1.8	30.5 + 0.55	39 + 1.9	23 + 0.55	24 + 0.55
KF169-Z49	16.9 + 0.55	30.5 + 1.8	48.5 + 0.55	64 + 1.9	36.5 + 0.55	39 + 0.55
KF189-D69	24.5 + 0.6	54 + 2	76 + 0.6	98 + 2.65	56 + 0.6	60 + 0.6

12.8.5.4 Helical worm gearboxes

Table 12-21 Oil quantities in l for C, CA., CAS, CAT, sizes 39 - 89

Type	Mounting position					
	M1	M2	M3	M4	M5	M6
C.39A-Z19	0.2 + 0.15	0.91 + 0.5	0.79 + 0.15	0.78 + 0.5	0.46 + 0.15	0.48 + 0.15
C.39-Z19	0.3 + 0.15	1.1 + 0.5	0.95 + 0.15	1 + 0.5	0.55 + 0.15	0.6 + 0.15
C.49-Z19	0.55 + 0.15	1.8 + 0.5	1.7 + 0.15	1.8 + 0.5	1 + 0.15	1.1 + 0.15
C.69-Z19	0.75 + 0.15	2.6 + 0.5	2.6 + 0.15	2.9 + 0.5	1.6 + 0.15	1.7 + 0.15
C.89-Z39	1.2 + 0.3	4.2 + 0.95	4.8 + 0.3	5 + 1	2.8 + 0.3	2.9 + 0.3
C.39A-D19	0.2 + 0.15	0.91 + 0.5	0.79 + 0.15	0.78 + 0.5	0.46 + 0.15	0.48 + 0.15
C.39-D19	0.3 + 0.15	1.1 + 0.45	0.95 + 0.15	1 + 0.45	0.55 + 0.15	0.6 + 0.15
C.49-D19	0.55 + 0.15	1.8 + 0.45	1.7 + 0.15	1.8 + 0.45	1 + 0.15	1.1 + 0.15
C.69-D19	0.75 + 0.15	2.6 + 0.45	2.6 + 0.15	2.9 + 0.45	1.6 + 0.15	1.7 + 0.15
C.89-D39	1.2 + 0.25	4.2 + 0.9	4.8 + 0.25	5 + 0.9	2.8 + 0.25	2.9 + 0.25

Table 12-22 Oil quantities in l for CZ, CAF., CAZ., CAD., sizes 39 - 89

Type	Mounting position					
	M1	M2	M3	M4	M5	M6
C.39A-Z19	0.2 + 0.15	0.91 + 0.5	0.79 + 0.15	0.78 + 0.5	0.46 + 0.15	0.48 + 0.15
C.39-Z19	0.3 + 0.15	1.1 + 0.5	0.95 + 0.15	1 + 0.5	0.6 + 0.15	0.6 + 0.15

Type	Mounting position					
	M1	M2	M3	M4	M5	M6
C.49-Z19	0.6 + 0.15	1.9 + 0.5	1.8 + 0.15	1.9 + 0.5	1.1 + 0.15	1.1 + 0.15
C.69-Z19	0.8 + 0.15	2.6 + 0.5	2.6 + 0.15	3 + 0.5	1.6 + 0.15	1.6 + 0.15
C.89-Z39	1.4 + 0.3	4.4 + 0.95	5 + 0.3	5.4 + 1	3 + 0.3	3 + 0.3
C.39A-D19	0.2 + 0.15	0.91 + 0.5	0.79 + 0.15	0.78 + 0.5	0.46 + 0.15	0.48 + 0.15
C.39-D19	0.3 + 0.15	1.1 + 0.45	0.95 + 0.15	1 + 0.45	0.6 + 0.15	0.6 + 0.15
C.49-D19	0.6 + 0.15	1.9 + 0.45	1.8 + 0.15	1.9 + 0.45	1.1 + 0.15	1.1 + 0.15
C.69-D19	0.8 + 0.15	2.6 + 0.45	2.6 + 0.15	3 + 0.45	1.6 + 0.15	1.6 + 0.15
C.89-D39	1.4 + 0.25	4.4 + 0.9	5 + 0.25	5.4 + 0.9	3 + 0.25	3 + 0.25

Table 12-23 Oil quantities in l for CF, sizes 39 - 89

Type	Mounting position					
	M1	M2	M3	M4	M5	M6
CF39A-Z19	0.2 + 0.15	0.96 + 0.5	0.84 + 0.15	0.83 + 0.5	0.51 + 0.15	0.48 + 0.15
CF39-Z19	0.3 + 0.15	1.2 + 0.5	1 + 0.15	1.1 + 0.5	0.65 + 0.15	0.65 + 0.15
CF49-Z19	0.6 + 0.15	2 + 0.5	1.9 + 0.15	2 + 0.5	1.2 + 0.15	1.2 + 0.15
CF69-Z19	0.8 + 0.15	2.6 + 0.5	2.6 + 0.15	3 + 0.5	1.6 + 0.15	1.6 + 0.15
CF89-Z39	1.4 + 0.3	4.4 + 0.95	5 + 0.3	5.4 + 1	3 + 0.3	3 + 0.3
CF39A-D19	0.2 + 0.15	0.96 + 0.5	0.84 + 0.15	0.83 + 0.5	0.51 + 0.15	0.48 + 0.15
CF39-D19	0.3 + 0.15	1.2 + 0.45	1 + 0.15	1.1 + 0.45	0.65 + 0.15	0.65 + 0.15
CF49-D19	0.6 + 0.15	2 + 0.45	1.9 + 0.15	2 + 0.45	1.2 + 0.15	1.2 + 0.15
CF69-D19	0.8 + 0.15	2.6 + 0.45	2.6 + 0.15	3 + 0.45	1.6 + 0.15	1.6 + 0.15
CF89-D39	1.4 + 0.25	4.4 + 0.9	5 + 0.25	5.4 + 0.9	3 + 0.25	3 + 0.25

Spare parts

13

13.1 Stocking of spare parts

By stocking the most important spare and wearing parts on site, you can ensure that the gearbox or geared motor is ready for use at any time.

NOTICE
Safety impairment caused by inferior products
The installation and / or use of inferior products has a negative impact on the design characteristics of the geared motor. As a consequence, active and / or passive safety is diminished.
Innomotics explicitly states that only spare parts and accessories supplied by Innomotics have been tested and approved by Innomotics.
Innomotics rules out any liability and warranty if you do not use original spare parts and original accessories.
Innomotics accepts the warranty only for original spare parts.

Note that special manufacturing and delivery specifications often apply to individual components. All spare parts offered by Innomotics are state-of-the-art and conform to the latest legal regulations.

Please state the following data when ordering spare parts:

- Serial number shown on the rating plate ③
- Type designation shown on the rating plate ⑥
- Part number
  - 3-digit and/or 4-digit position number from the spare parts list
  - 6-digit object number
  - 7-digit article number
  - 14-digit material number
- Quantity

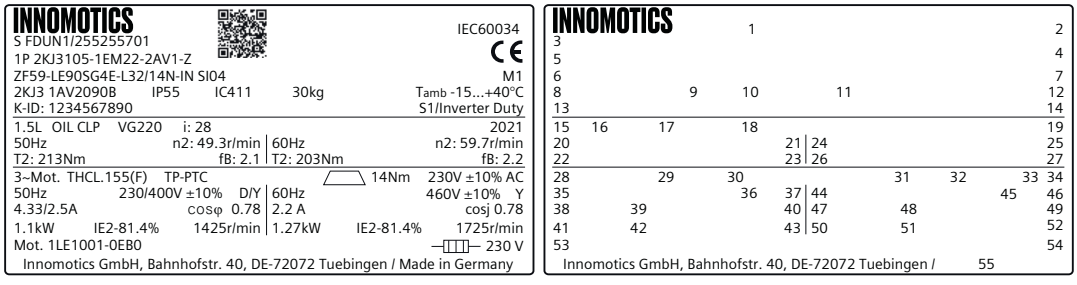

Figure 13-1 Example of a rating plate

For motors with their own rating plate, the spare parts documentation in the original operating instructions applies.

13.2 Spares on Web

Rapid support around the clock – the Innomotics geared motor service organization

Service is your partner for comprehensive support and innovative services for increasing your productivity. The original parts and manufacturing expertise help you achieve maximum machine availability and productivity. The proven services therefore contribute to reducing the total cost of ownership for you, as well as to creating sustainable values and solutions.

The technical product lists are provided in Spares on Web (https://www.innomotics.com/hub/en/customer-service/spare-parts).

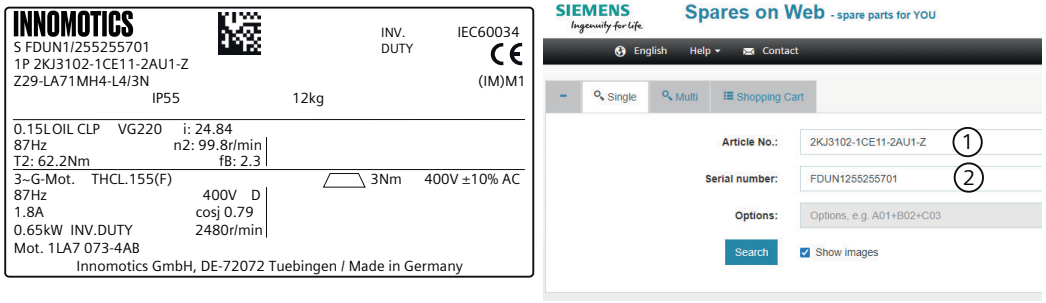

① Article number

② Serial number

Figure 13-2 Enter a sample article and serial number in Spares on Web

Procedure

1. Open the spare parts list with the link provided.
2. In field ① "Article No.", enter the article number stamped on the rating plate.
   Example: 2KJ3102-1CE11-2AU-Z
3. In the field ② "Serial number", enter the production number stated on the rating plate or only the abbreviated number.
   Example: FDUN1/255255701 or 2552557
4. You can directly access the operating instructions via "Industry Online Support (SIOS)".
5. Use the "Search" function to display the spare parts list.
6. The installation positions of the listed spare parts can be determined based on the position numbers specified in column "BKZ" (reference designation) and the spare part drawings in Chapter Spare parts lists (Page 191) .

You have opened the spare parts list through Spares on Web.

13.3 Spare parts lists

13.3.1 Helical gearbox E, sizes 39 - 149

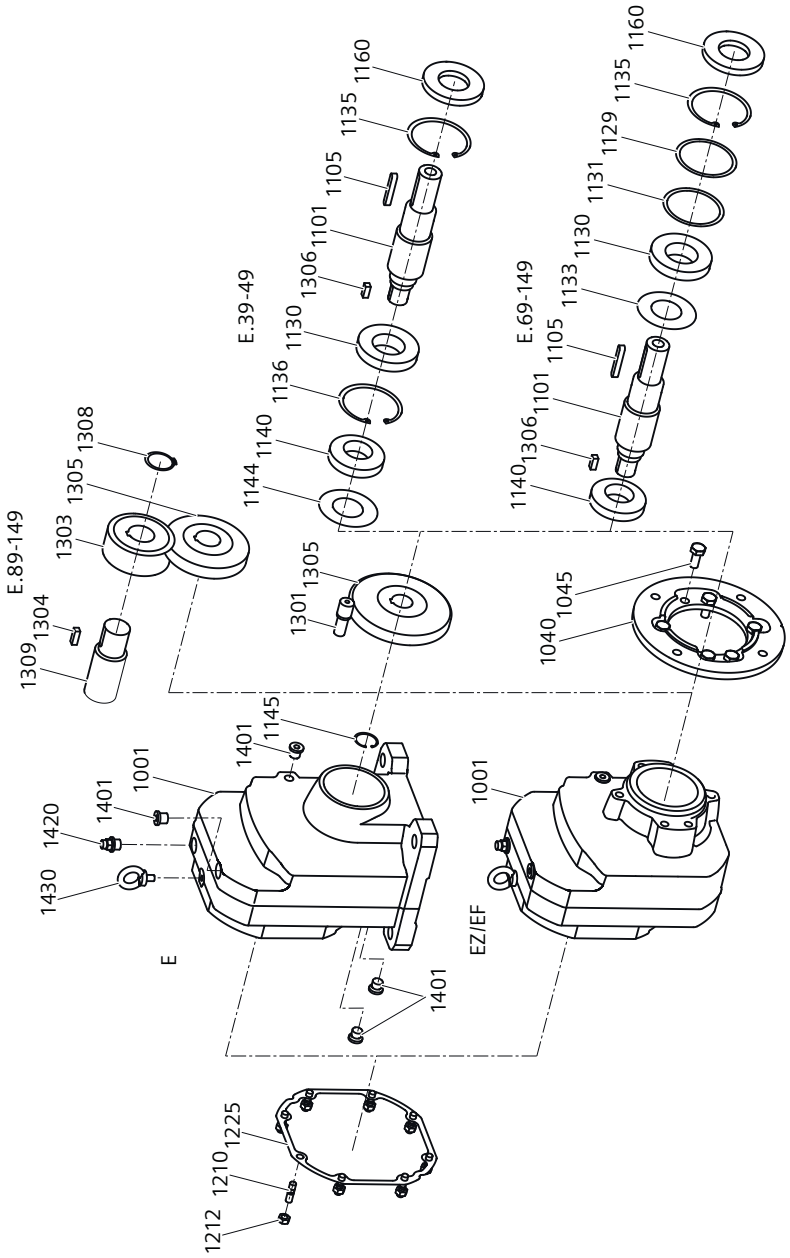

Figure 13-3 Helical gearbox E sizes 39 - 149

1001	Gearbox housing	1160	Shaft sealing ring
1040	Output flange	1210	Screw
1045	Screw	1212	Nut
1101	Output shaft	1225	Seal

1105	Feather key	1301	Shank pinion
1129	Supporting disk	1303	Shell pinion
1130	Bearing	1304	Feather key
1131	Shim	1305	Helical gear
1133	NILOS ring	1306	Feather key
1135	Locking ring	1308	Locking ring
1136	Locking ring	1309	Seal
1140	Bearing	1401	Screw plug
1144	Supporting ring / shim	1420	Vent filter
1145	Locking ring	1430	Lifting eyebolt

13.3.2 Helical gearbox D / Z, sizes 19 - 189

Note

For gearbox sizes 19 and 29, Innomotics recommends that the gearbox is replaced if service is required.

Parts subject to wear are available on request.

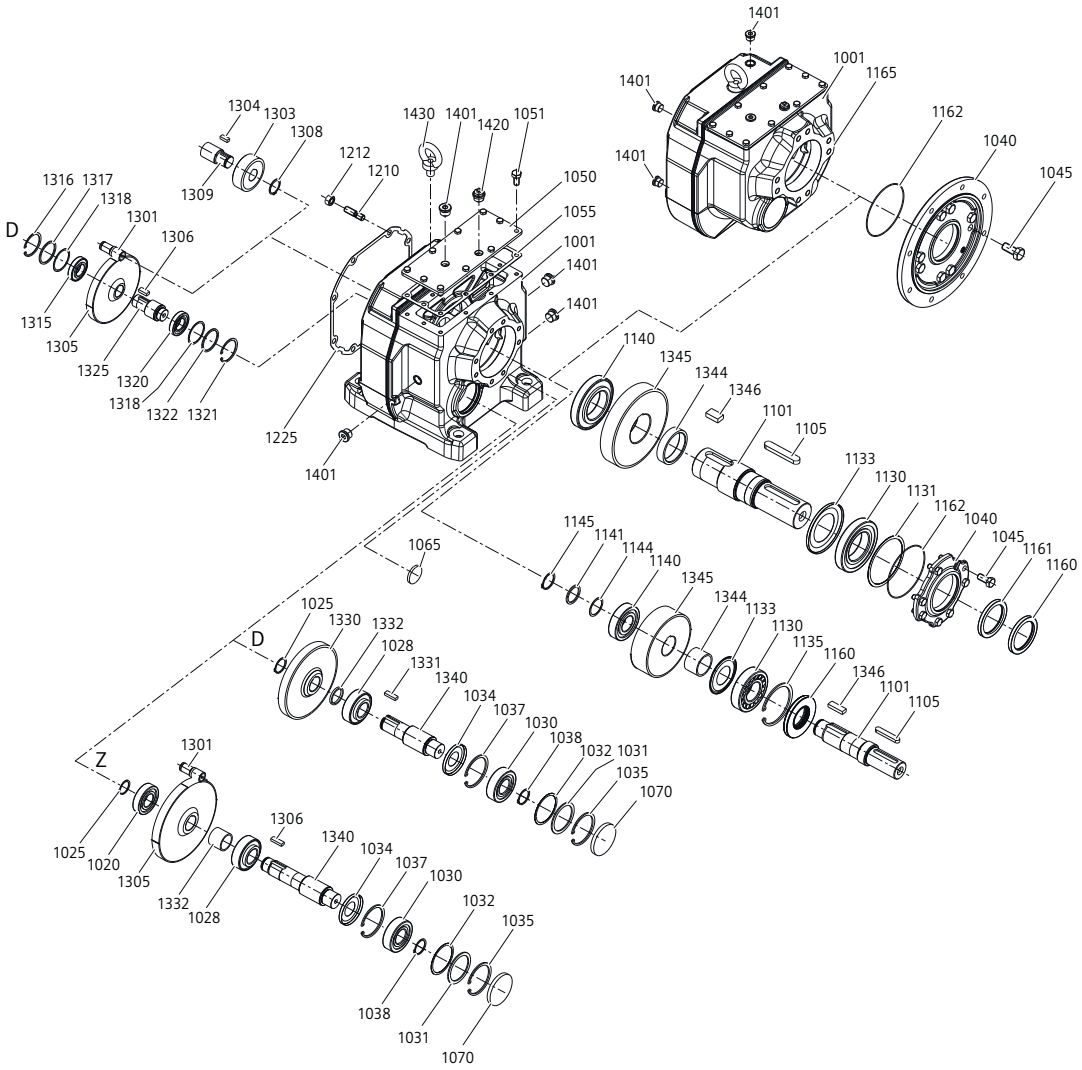

Figure 13-4 Helical gearbox D/Z sizes 19 - 189

1001	Gearbox housing	1162	O-ring
1020	Bearing	1165	Seal
1025	Locking ring	1210	Screw
1028	Bearing	1212	Nut
1030	Bearing	1225	Seal

1031	Supporting disk
1032	Shim
1034	NILOS ring
1035	Locking ring
1037	Locking ring
1038	Locking ring
1040	Output flange
1045	Screw
1050	Housing cover
1051	Screw
1055	Seal
1065	Sealing cap
1070	Sealing cap
1101	Output shaft
1105	Feather key
1130	Bearing
1131	Shim
1133	NILOS ring
1135	Locking ring
1140	Bearing
1141	Supporting ring / shim
1144	Supporting ring / shim
1145	Locking ring
1160	Shaft sealing ring
1161	Shaft sealing ring
1301	Shank pinion
1303	Shell pinion
1304	Feather key
1305	Helical gear
1306	Feather key
1308	Locking ring
1309	Seal
1315	Bearing
1316	Locking ring
1317	Supporting disk
1318	Supporting disk
1320	Bearing
1321	Locking ring
1322	Supporting disk
1325	Pinion shaft
1330	Helical gear
1331	Feather key
1332	Bush / locking ring
1340	Pinion shaft
1344	Sleeve / bushing
1345	Helical gear
1346	Feather key
1401	Screw plug
1420	Vent filter
1430	Lifting eyebolt

13.3.3 Parallel shaft gearbox F, sizes 29 - 189

Note

For gearbox size 29, Innomotics recommends that the gearbox is replaced if service is required. Parts subject to wear are available on request.

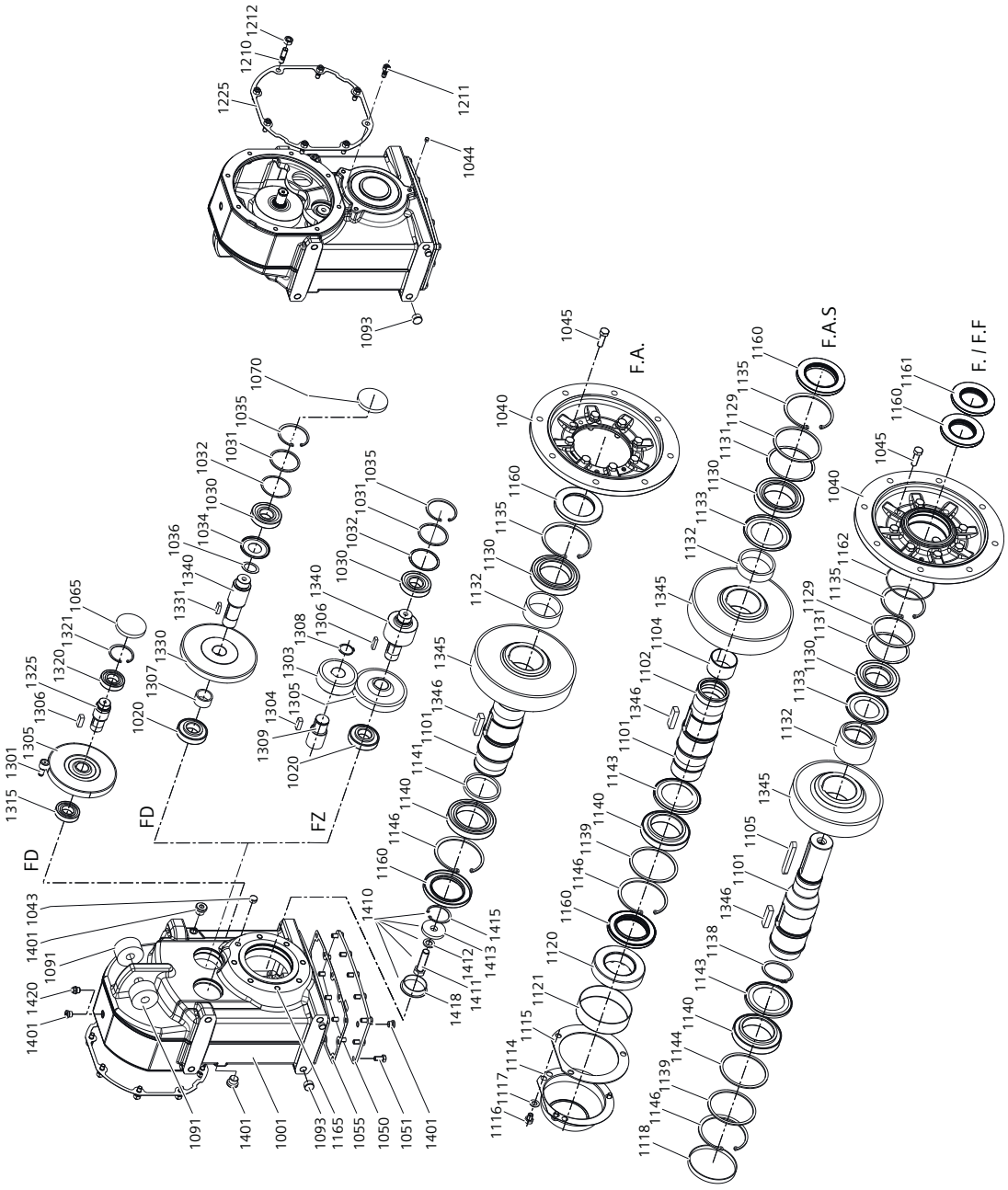

Figure 13-5 Parallel shaft gearbox F sizes 29 - 189

1001	Gearbox housing
1020	Bearing
1030	Bearing
1031	Supporting disk
1032	Shim
1034	NILOS ring
1035	Locking ring
1036	Shim
1040	Output flange
1043	Plug
1044	Plug
1045	Screw
1050	Housing cover
1051	Screw
1055	Seal
1065	Sealing cap
1070	Sealing cap
1091	Rubber bush
1093	Plug
1101	Output shaft
1102	Bushing
1104	Seal
1105	Feather key
1114	Cover NDE
1115	Seal
1116	Screw
1117	Screw lock washer
1118	Plug / sealing cap
1120	Shrink disk
1121	Protective cap
1129	Supporting disk
1130	Bearing
1131	Shim
1132	Bushing
1133	NILOS ring
1135	Locking ring
1138	Locking ring
1139	Supporting disk
1140	Bearing
1141	Supporting ring / shim
1143	NILOS ring
1144	Supporting ring / shim
1146	Locking ring
1160	Shaft sealing ring
1161	Shaft sealing ring
1162	O-ring
1165	Seal
1210	Screw
1211	Screw lock washer
1212	Nut
1225	Seal
1301	Shank pinion
1303	Shell pinion
1304	Feather key
1305	Helical gear
1306	Feather key
1307	Sleeve / bushing
1308	Locking ring
1309	Seal
1315	Bearing
1320	Bearing
1321	Locking ring
1325	Pinion shaft
1330	Helical gear
1331	Feather key
1340	Pinion shaft
1345	Helical gear
1346	Feather key
1401	Screw plug
1410	Mounting accessories
1411	Screw
1412	Locking ring
1413	Disk
1415	Locking ring
1418	Sealing cap
1420	Vent filter

13.3.4 Bevel gearbox B, sizes 19 - 49

Note

For gearbox sizes 19 and 29, Innomotics recommends that the gearbox is replaced if service is required.

Parts subject to wear are available on request.

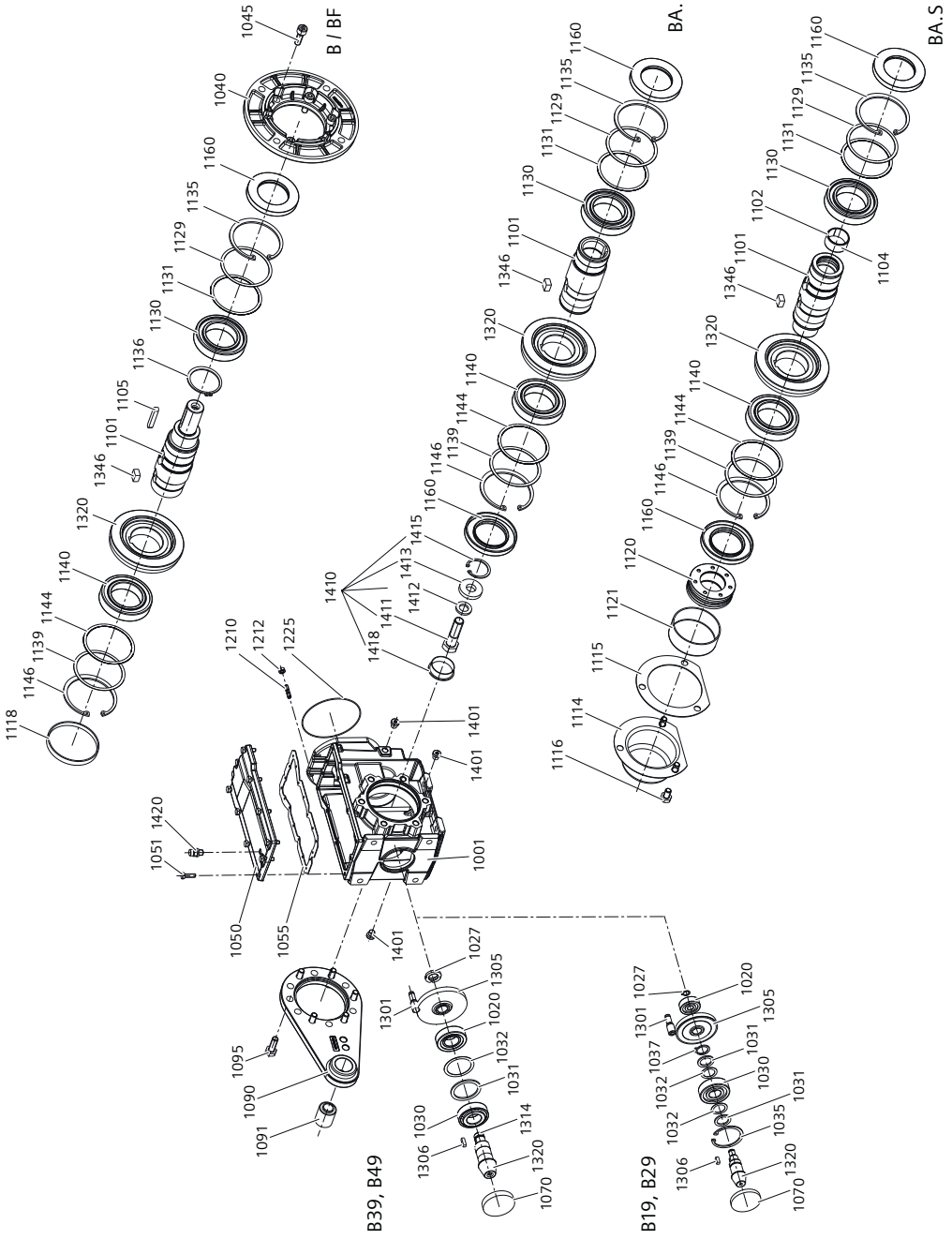

Figure 13-6 Bevel gearbox B, sizes 19 - 49

1001	Gearbox housing
1020	Bearing
1027	Locking ring / nut
1030	Bearing
1031	Supporting disk
1032	Shim
1035	Locking ring
1037	Locking ring
1040	Output flange
1045	Screw
1050	Housing cover
1051	Screw
1055	Seal
1070	Sealing cap
1090	Torque arm
1091	Rubber bush
1095	Screw
1101	Output shaft
1102	Bushing
1104	Seal
1105	Feather key
1114	Cover NDE
1115	Seal
1116	Screw
1118	Plug / sealing cap
1120	Shrink disk
1121	Protective cap
1129	Supporting disk
1130	Bearing
1131	Shim
1135	Locking ring
1136	Locking ring
1139	Supporting disk
1140	Bearing
1144	Supporting ring / shim
1146	Locking ring
1160	Shaft sealing ring
1210	Screw
1212	Nut
1225	Seal
1301	Shank pinion
1305	Helical gear
1306	Feather key
1314	Screw lock washer
1320	Bevel gear pair
1346	Feather key
1401	Screw plug
1410	Mounting accessories
1411	Screw
1412	Locking ring
1413	Disk
1415	Locking ring
1418	Sealing cap
1420	Vent filter

13.3.5 Bevel gearbox K, sizes 39 - 189

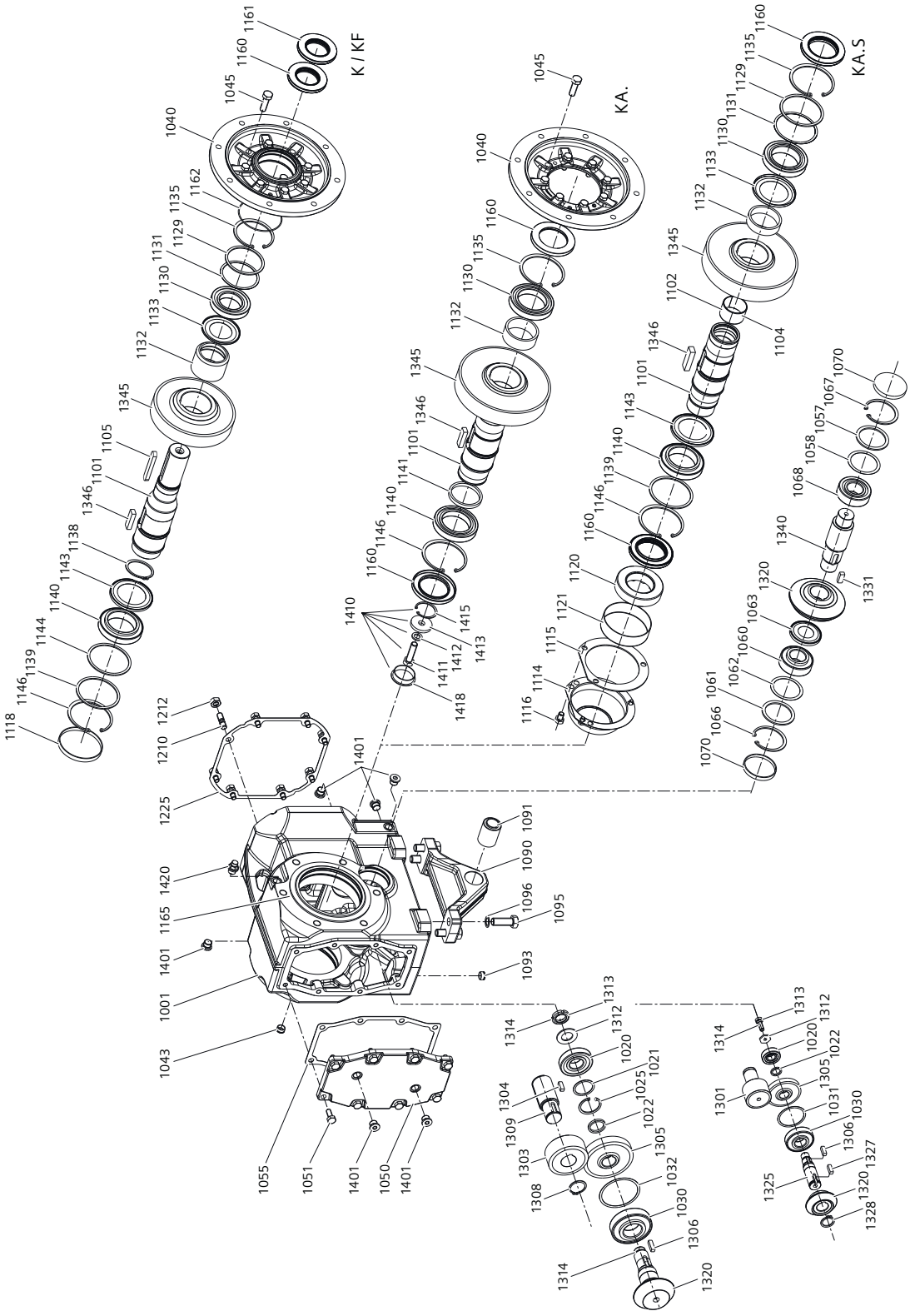

Figure 13-7 Bevel gearbox K, sizes 39 - 189

1001	Gearbox housing
1020	Bearing
1021	Supporting ring / shim
1022	Supporting ring / shim
1025	Locking ring
1030	Bearing
1031	Supporting disk
1032	Shim
1040	Output flange
1043	Plug
1045	Screw
1050	Housing cover
1051	Screw
1055	Seal
1057	Supporting disk
1058	Shim
1060	Tapered roller bearing
1061	Supporting disk
1062	Shim
1063	NILOS ring
1066	Locking ring
1067	Locking ring
1068	Tapered roller bearing
1070	Sealing cap
1090	Torque arm
1091	Rubber bush
1093	Plug
1095	Screw
1096	Screw lock washer
1101	Output shaft
1102	Bushing
1104	Seal
1105	Feather key
1114	Cover NDE
1115	Seal
1116	Screw
1118	Plug / sealing cap
1120	Shrink disk
1121	Protective cap
1129	Supporting disk
1130	Bearing
1133	NILOS ring
1135	Locking ring
1138	Locking ring
1139	Supporting disk
1140	Bearing
1141	Supporting ring / shim
1143	NILOS ring
1144	Supporting disk/shim
1146	Locking ring
1160	Shaft sealing ring
1161	Shaft sealing ring
1162	O-ring
1165	Seal
1210	Screw
1212	Nut
1225	Seal
1301	Shank pinion
1303	Shell pinion
1304	Feather key
1305	Helical gear
1306	Feather key
1308	Locking ring
1309	Seal
1312	Disk
1313	Bolt/nut
1314	Screw lock washer
1320	Bevel gear pair
1325	Pinion shaft
1327	Feather key
1328	Locking ring
1331	Feather key
1340	Pinion shaft
1345	Helical gear
1346	Feather key
1401	Screw plug
1410	Mounting accessories
1411	Screw
1412	Locking ring
1413	Disk
1415	Locking ring
1418	Sealing cap

1131	Shim	1420	Vent filter
1132	Supporting ring / shim		

13.3.6 Helical worm gearbox C, sizes 29 - 89

Note

For gearbox size 29, Innomotics recommends that the gearbox is replaced if service is required. Parts subject to wear are available on request.

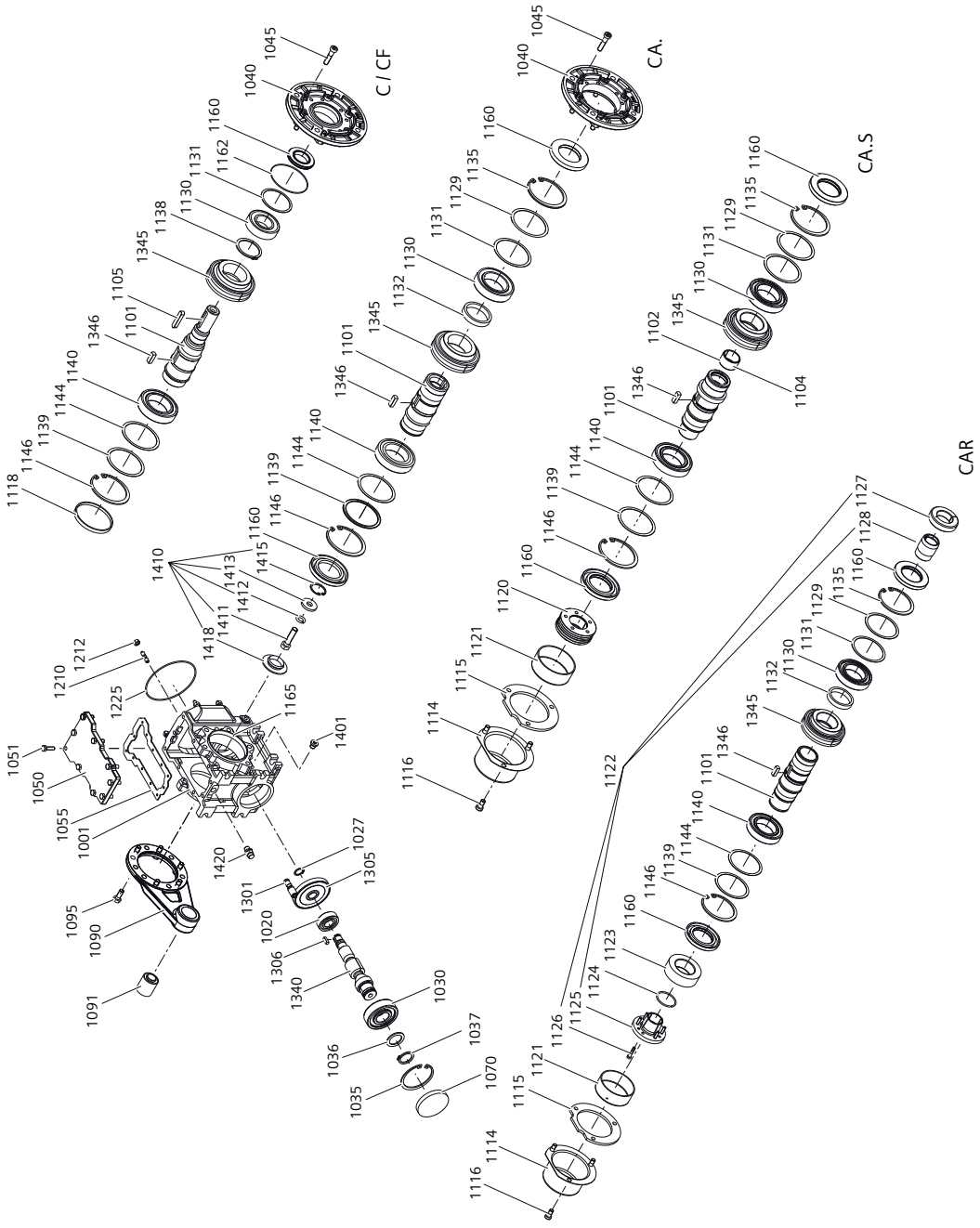

Figure 13-8 Helical worm gearbox C sizes 29 - 89

1001	Gearbox housing
1020	Bearing
1025	Locking ring
1027	Locking ring
1030	Bearing
1035	Locking ring
1036	Supporting ring / shim
1037	Locking ring
1040	Output flange
1045	Screw
1050	Housing cover
1051	Screw
1055	Seal
1070	Sealing cap
1090	Torque arm
1091	Rubber bush
1095	Screw
1101	Output shaft
1102	Bushing
1104	Seal
1105	Feather key
1114	Cover NDE
1115	Seal
1116	Screw
1118	Plug / sealing cap
1120	Shrink disk
1121	Protective cap
1129	Supporting disk
1130	Bearing
1131	Shim
1132	Supporting ring / shim
1135	Locking ring
1138	Locking ring
1139	Supporting disk
1140	Bearing
1144	Shim
1146	Locking ring
1160	Shaft sealing ring
1162	O-ring
1165	Seal
1210	Screw
1212	Nut
1225	Seal
1301	Shank pinion
1305	Helical gear
1306	Feather key
1340	Pinion shaft
1345	Helical gear
1346	Feather key
1401	Screw plug
1410	Mounting accessories
1411	Screw
1412	Locking ring
1413	Disk
1415	Locking ring
1418	Sealing cap
1420	Vent filter

13.3.7 Worm geared motor S, frame sizes 09 - 29

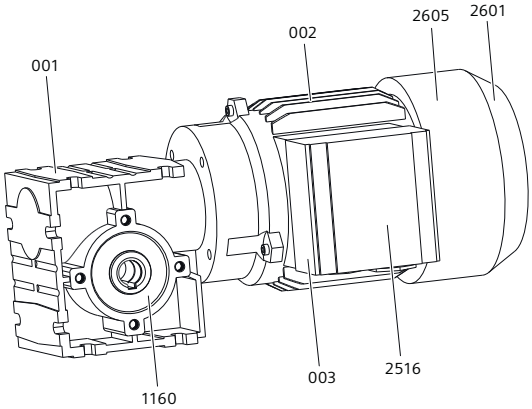

Figure 13-9 Worm geared motor S, frame sizes 09 - 29

001	Worm gearbox, complete
002	Complete motor LEI63/71
003	Terminal box, complete
1160	Shaft sealing ring
2516	Terminal board, complete
2601	Fan
2605	Fan cover

13.3.8 ShaftMount assembly system, sizes 29 - 89

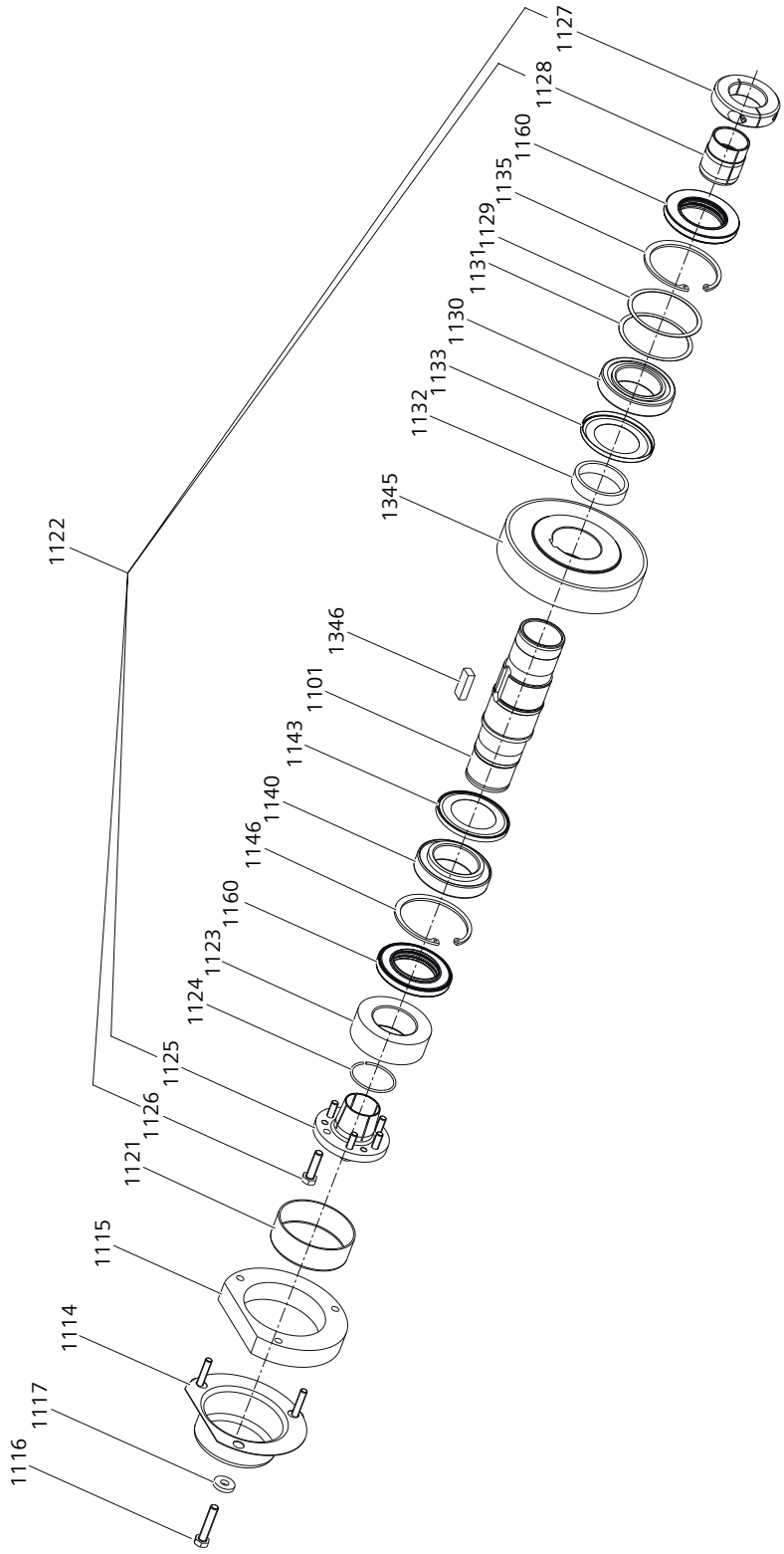

Figure 13-10 ShaftMount assembly system, sizes 29 - 89

1101	Output shaft
1114	Cover NDE
1115	Seal
1116	Screw
1117	Screw lock washer
1121	Protective cap
1122	ShaftMount assembly system
1123	Thrust collar
1124	Snap ring
1125	Tapered bushing
1126	Screw
1127	Clamping ring
1128	Bushing
1129	Supporting disk
1130	Bearing
1131	Shim
1132	Bushing
1133	NILOS ring
1135	Locking ring
1140	Bearing
1143	NILOS ring
1146	Locking ring
1160	Shaft sealing ring
1345	Helical gear
1346	Feather key

13.3.9 XLplus and VLplus heavy-duty bearing systems, sizes 89-169

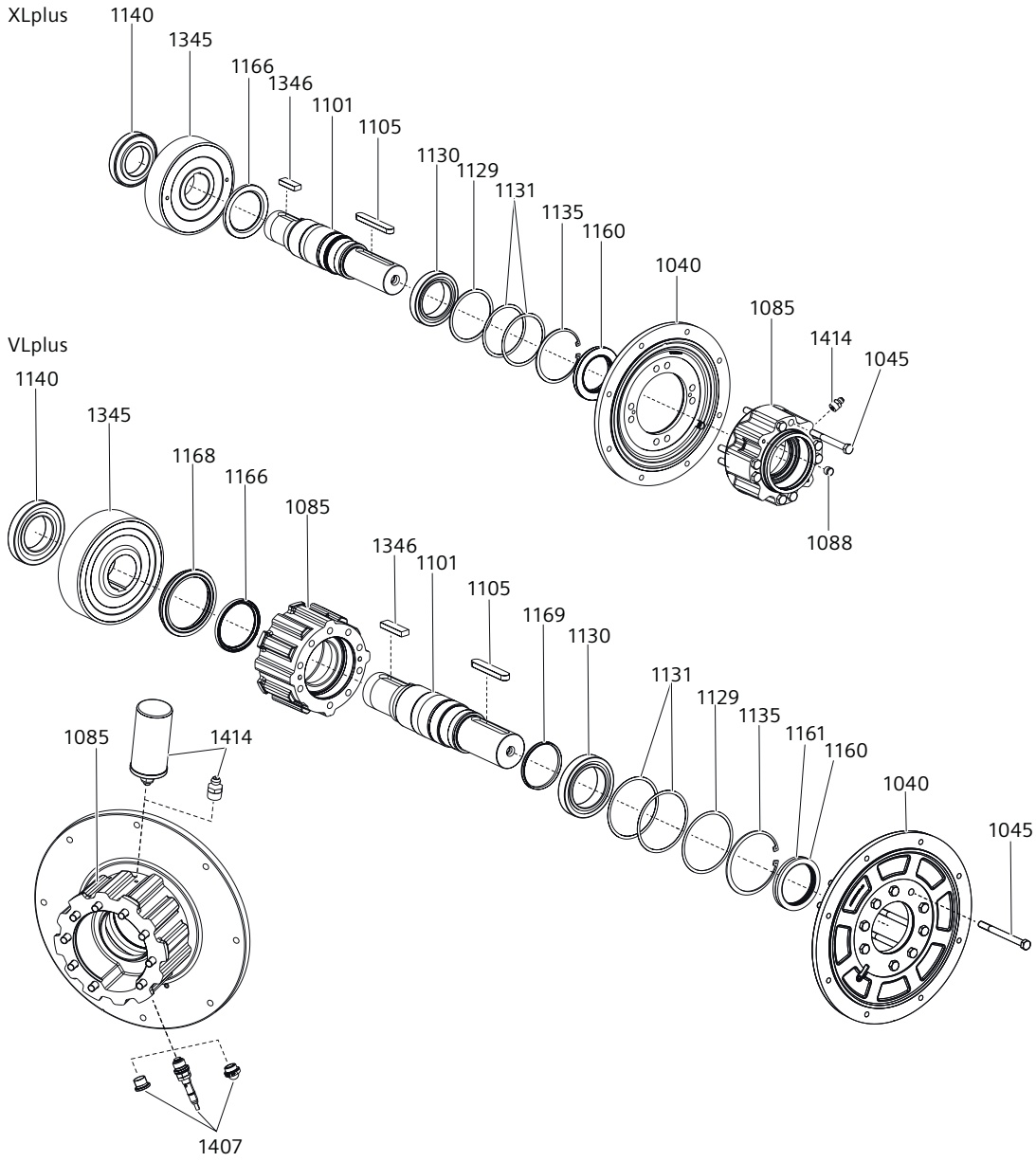

Figure 13-11 XLplus and VLplus helical gearboxes

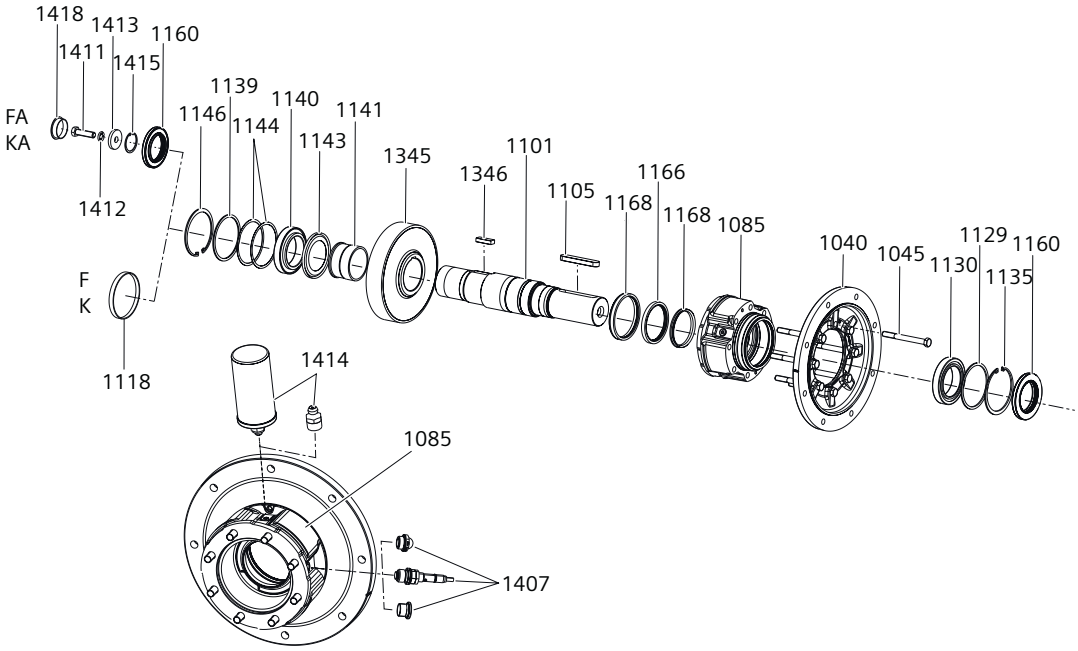

Figure 13-12 VLplus parallel-shaft gearboxes and bevel gearboxes

Spare parts list for XLplus and VLplus heavy-duty bearing systems

1040	Output flange	1146	Locking ring
1045	Screw	1160	Shaft sealing ring
1085	Adapter	1161	Shaft sealing ring
1088	Plug	1166	Shaft sealing ring
1101	Output shaft	1168	Ring
1105	Parallel key	1169	Axial seal
1118	Plug / sealing cap	1345	Helical
1129	Supporting disk	1346	Parallel key
1130	Bearing	1407	Screw plug / oil sight glass / oil sensor
1131	Shim	1411	Screw
1135	Locking ring	1412	Locking ring
1139	Supporting disk	1413	Disk
1140	Bearing	1414	Screw plug / automatic regreasing device
1141	Support ring / shim	1415	Locking ring
1143	NILOS ring	1418	Sealing cap
1144	Support ring / shim		

Declaration of incorporation of partly completed machinery, Declaration of Conformity

14

Einbauerklärung
Declaration of incorporation

Nr./ *No.* A5E36963968AG

Produktbezeichnung: *Product identification:*	Getriebe mit Adapter 2KJ3... *Gearbox with adapter 2KJ3...*	
Typ: *Type:*	A... – B... – C...	
Getriebe: *Gearbox*:	A...	= [A = E, Z, D, F, B, K, C, S]
Adapter: *Adapter*:	B...	= [B = K, A]
ATEX-Ausführung: *ATEX-version*	C...	= [C = _, 1]
Hersteller: *Manufacturer*	Innomotics GmbH	
Anschrift: *Address*	Bahnhofstraße 40 DE-72072 Tübingen	

Name, Anschrift bevollmächtigte Person für technische Unterlagen:
Name, address of authorised person for technical file:

Innomotics GmbH
Xingjian Chen
Bahnhofstraße 40
DE-72072 Tübingen

Die alleinige Verantwortung für die Ausstellung dieser Einbauerklärung trägt der Hersteller.

This declaration of incorporation is issued under the sole responsibility of the manufacturer.

Der oben beschriebene Gegenstand der Erklärung erfüllt die einschlägigen Harmonisierungsrechtsvorschriften der Union:

The object of the declaration described above is in conformity with the relevant Union harmonisation legislation:

Maschinenrichtlinie:

2006/42/EG Richtlinie des Europäischen Parlaments und des Rates vom 17. Mai 2006 über Maschinen und zur Änderung der Richtlinie 95/16/EG

Machinery Directive:

2006/42/EC *Directive of the European Parliament and of the Council of 17 May 2006 on machinery, and amending Directive 95/16/EC*

Weitere Angaben über die Einhaltung dieser Richtlinie(n) enthält Anhang MR2, der ein integraler Bestandteil dieser Erklärung ist.

Further information about the conformity to this Directive(s) is given in Annex MR2, which is an integral part of this declaration.

Harmonisierte Normen / *Harmonised standards*:

Referenznummer *Reference number*	Ausgabedatum *Date of issue*	Referenznummer *Reference number*	Ausgabedatum *Date of issue*
EN ISO 12100	2010	.....	.....

Diese Erklärung bescheinigt die Übereinstimmung mit den genannten Richtlinien, ist jedoch keine Beschaffenheits- oder Haltbarkeitsgarantie.
Die Sicherheitshinweise der mitgelieferten Produktdokumentation sind zu beachten.

This declaration is an attestation of conformity with the indicated Directive(s) but does not imply any guarantee of quality or durability.
The safety instructions of the accompanying product documentation shall be observed.

Copyright (©) Innomotics GmbH; 2023; All rights reserved

Einbauerklärung
Declaration of incorporation

Nr. / No. A5E36963968AG

Das bezeichnete Produkt ist eine unvollständige Maschine im Sinne von Art. 2 g) der Richtlinie 2006/42/EG. Sie ist nur dazu bestimmt, in andere Maschinen oder in andere unvollständige Maschinen oder Ausrüstungen eingebaut oder mit ihnen zusammengefügt zu werden.
The designated product is a partly completed machinery in the sense of Art 2 g) of Directive 2006/42/EC. It is only intended to be incorporated into or assembled with other machinery or other partly completed machinery or equipment.

Die relevanten, angewendeten und eingehaltenen grundlegenden Anforderungen nach Anhang I der Richtlinie 2006/42/EG sind im Anhang MR2 zu dieser Erklärung aufgeführt.
The relevant, applied and fulfilled essential requirements of Annex I of Directive 2006/42/EC are listed in Annex MR2 of this declaration.

Die speziellen technischen Unterlagen nach Anhang VII, B der Richtlinie 2006/42/EG wurden erstellt und werden den Behörden auf begründete Anforderung in ☒ elektronischer / ☐ Papierform zur Verfügung gestellt.
The relevant technical documentation according to Annex VII, B of Directive 2006/42/EC has been compiled and will be provided to the authorities upon request in ☒ electronic / ☐ paper form.

Die unvollständige Maschine darf erst dann in Betrieb genommen werden, wenn gegebenenfalls festgestellt wurde, dass die Maschine, in die die unvollständige Maschine eingebaut werden soll, den Bestimmungen der Maschinenrichtlinie 2006/42/EG entspricht.
The partly completed machinery must not be put into service until the final machinery into which it is to be incorporated has been declared in conformity with the provisions of Directive 2006/42/EC, where appropriate.

Unterzeichnet für und im Namen von: / *Signed for and on behalf of:*
Innomotics GmbH

Tübingen, 18. September 2023
Ort / *place*, Datum der Ausstellung / *date of issue*

Tasarsu Kaan Takuma
Digital unterschrieben von Tasarsu Kaan Takuma
Datum: 2023.10.19 18:19:50 +02'00'

i. V. Kaan Tasarsu
Head GM

Chen Xingjian
Digital signiert von Chen Xingjian
DN: cn=Chen Xingjian, o=Siemens, email=xingjian.chen@siemens.com
Grund: Ich bin mit den angegebenen Teilen dieses Dokuments einverstanden
Datum: 2023.09.20 18:33:36 +02'00'

i. V. Xingjian Chen
Head Research & Development GM

Diese Erklärung bescheinigt die Übereinstimmung mit den genannten Richtlinien, ist jedoch keine Beschaffenheits- oder Haltbarkeitsgarantie.
Die Sicherheitshinweise der mitgelieferten Produktdokumentation sind zu beachten.

This declaration is an attestation of conformity with the indicated Directive(s) but does not imply any guarantee of quality or durability.
The safety instructions of the accompanying product documentation shall be observed.

Copyright (©) Innomotics GmbH; 2023; All rights reserved

Anhang MR2
zur Einbauerklärung

Nr. / No. A5E36963968AG

Produktbezeichnung: Getriebe mit Adapter 2KJ3...

Die folgenden grundlegenden Sicherheits- und Gesundheitsschutzanforderungen der Richtlinie 2006/42/EG, Anh. I, sind für die oben genannte unvollständige Maschine relevant und wurden entsprechend der Angabe in Spalte 3 erfüllt bzw. zeigen noch Restgefahren, die vom Hersteller der Gesamtmaschine zu beachten sind. Die für das Produkt nicht relevanten Risiken sind nicht aufgeführt.

2006/42/EG Anh. I	**Bezeichnung**	**Anforderung erfüllt**	
		j/n	**Weitere Hinweise**
1	**Grundlegende Sicherheits- und Gesundheistsschutz-anforderungen**		
1.1.2	Grundsätze für die Integration der Sicherheit	j	
1.1.3	Materialien und Produkte	j	
1.1.5	Konstruktion der Maschine im Hinblick auf die Handhabung	j	
1.3	**Schutzmaßnahmen gegen mechanische Gefährdungen**		
1.3.1	Risiko des Verlusts der Standsicherheit	j	
1.3.2	Bruchrisiko beim Betrieb	j	
1.3.3	Risiken durch herabfallende oder herausgeschleuderte Gegenstände	j	
1.3.4	Risiken durch Oberflächen, Kanten und Ecken	j	
1.3.8.1	Bewegliche Teile der Kraftübertragung	j	
1.4	**Anforderungen an Schutzeinrichtungen**		
1.4.1	Allgemeine Anforderungen	j	
1.4.2	Besondere Anforderungen an trennende Schutzeinrichtungen	j	
1.4.2.1	Feststehende trennende Schutzeinrichtungen	j	
1.5	**Risiken durch sonstige Gefährdungen**		
1.5.4	Montagefehler	j	
1.5.5	Extreme Temperaturen	j	
1.5.6	Brand	j	
1.5.8	Lärm	j	
1.5.9	Vibrationen	j	
1.5.13	Emission gefährlicher Werkstoffe und Substanzen	j	
1.6	**Instandhaltung**		
1.6.1	Wartung der Maschine	j	
1.6.2	Zugang zu den Bedienungsständen und den Eingriffspunkten für die Instandhaltung	j	

Diese Erklärung bescheinigt die Übereinstimmung mit den genannten Richtlinien, ist jedoch keine Beschaffenheits- oder Haltbarkeitsgarantie.
Die Sicherheitshinweise der mitgelieferten Produktdokumentation sind zu beachten.

This declaration is an attestation of conformity with the indicated Directive(s) but does not imply any guarantee of quality or durability.
The safety instructions of the accompanying product documentation shall be observed.

Copyright (©) Innomotics GmbH; 2023; All rights reserved

Anhang MR2
zur Einbauerklärung

Nr. / No. A5E36963968AG

1.7	**Informationen**		
1.7.1	Informationen und Warnhinweise an der Maschine	j	
1.7.2	Warnung vor Restrisiken	j	
1.7.3	Kennzeichnung der Maschinen	j	
1.7.4	Betriebsanleitung	j	
1.7.4.1	Allgemeine Grundsätze für die Abfassung der Betriebsanleitung	j	
1.7.4.2	Inhalt der Betriebsanleitung	j	
1.7.4.3	Verkaufsprospekte	j	

Diese Erklärung bescheinigt die Übereinstimmung mit den genannten Richtlinien, ist jedoch keine Beschaffenheits- oder Haltbarkeitsgarantie.
Die Sicherheitshinweise der mitgelieferten Produktdokumentation sind zu beachten.

This declaration is an attestation of conformity with the indicated Directive(s) but does not imply any guarantee of quality or durability.
The safety instructions of the accompanying product documentation shall be observed.

Copyright (©) Innomotics GmbH; 2023; All rights reserved

Annex MR2
to the declaration of incorporation

Nr. / No. A5E36963968AG

Product identification: Gearbox with adapter 2KJ3...

The following essential health and safety requirements of Directive 2006/42/EG, Annex I are relevant for the identified uncompleted machinery. According to the remarks in column 3 they have been solved respectively bear residual hazards which have to be covered by the manufacturer of the final machinery. Risks, not being relevant for the uncompleted machinery are not listed.

2006/42/EC Annex I	**Denotation**	**Requirement fulfilled**	
		y/n	**Additional remark**
1	**Essential health and safety requirements**		
1.1.2	*Principles of safety integration*	*y*	
1.1.3	*Materials and products*	*y*	
1.1.5	*Design of machinery to facilitate its handling*	*y*	
1.3	**Protection against mechanical hazards**		
1.3.1	*Risk of loss of stability*	*y*	
1.3.2	*Risk of break-up during operation*	*y*	
1.3.3	*Risks due to falling or ejected objects*	*y*	
1.3.4	*Risks due to surfaces, edges or angles*	*y*	
1.3.8.1	*Moving transmission parts*	*y*	
1.4	**Required characteristics of guards and protective devices**		
1.4.1	*General requirements*	*y*	
1.4.2	*Special requirements for guards*	*y*	
1.4.2.1	*Fixed guards*	*y*	
1.5	**Risks due to other hazards**		
1.5.4	*Errors of fitting*	*y*	
1.5.5	*Extreme temperatures*	*y*	
1.5.6	*Fire*	*y*	
1.5.8	*Noise*	*y*	
1.5.9	*Vibrations*	*y*	
1.5.13	*Emissions of hazardous materials and substances*	*y*	
1.6	**Maintenance**		
1.6.1	*Machinery maintenance*	*y*	
1.6.2	*Access to operating positions and servicing points*	*y*	

Diese Erklärung bescheinigt die Übereinstimmung mit den genannten Richtlinien, ist jedoch keine Beschaffenheits- oder Haltbarkeitsgarantie.
Die Sicherheitshinweise der mitgelieferten Produktdokumentation sind zu beachten.

This declaration is an attestation of conformity with the indicated Directive(s) but does not imply any guarantee of quality or durability.
The safety instructions of the accompanying product documentation shall be observed.

Copyright (©) Innomotics GmbH; 2023; All rights reserved

Annex MR2
to the declaration of incorporation

Nr. / No. A5E36963968AG

1.7	***Information***		
1.7.1	*Information and warnings on the machinery*	*y*	
1.7.2	*Warning of residual risks*	*y*	
1.7.3	*Marking of machinery*	*y*	
1.7.4	*Instructions*	*y*	
1.7.4.1	*General principles for the drafting of instructions*	*y*	
1.7.4.2	*Contents of the instructions*	*y*	
1.7.4.3	*Sales literature*	*y*	

Diese Erklärung bescheinigt die Übereinstimmung mit den genannten Richtlinien, ist jedoch keine Beschaffenheits- oder Haltbarkeitsgarantie.
Die Sicherheitshinweise der mitgelieferten Produktdokumentation sind zu beachten.

This declaration is an attestation of conformity with the indicated Directive(s) but does not imply any guarantee of quality or durability.
The safety instructions of the accompanying product documentation shall be observed.

Copyright (©) Innomotics GmbH; 2023; All rights reserved

EU-Konformitätserklärung / *EU-declaration of conformity*

Nr. / *No.* A5E43968284AF

Produktbezeichnung: *Product identification:*	Getriebe mit Adapter 2KJ3... *Gearbox with adapter 2KJ3...*	
Typ*:* *Type:*	A... – B... – C...	
Getriebe: *Gearbox:*	A...	= [A = E, Z, D, F, B, K, C, S]
Adapter: *Adapter*:	B...	= [B = K, A]
ATEX-Ausführung: *ATEX-version*	C...	= [C = _, 1]
Hersteller: *Manufacturer:*	Innomotics GmbH	
Anschrift: *Address:*	Bahnhofstraße 40 DE-72072 Tübingen	

Die alleinige Verantwortung für die Ausstellung dieser Konformitätserklärung trägt der Hersteller.
This declaration of conformity is issued under the sole responsibility of the manufacturer.

Der oben beschriebene Gegenstand der Erklärung erfüllt die einschlägigen Harmonisierungsrechtsvorschriften der Union:
The object of the declaration described above is in conformity with the relevant Union harmonisation legislation:

2014/34/EU Richtlinie des Europäischen Parlaments und des Rates vom 26. Februar 2014 zur Harmonisierung der Rechtsvorschriften der Mitgliedstaaten für Geräte und Schutzsysteme zur bestimmungsgemäßen Verwendung in explosionsgefährdeten Bereichen; Amtsblatt der EU L96, 29/03/2014, S. 309–356
2014/34/EU *Directive of the European Parliament and of the Council of 26 February 2014 on the harmonisation of the laws of the Member States relating to equipment and protective systems intended for use in potentially explosive atmospheres; Official Journal of the EU L96, 29/03/2014, p. 309–356*

Version der Ausrüstung Gruppe II der Kategorie 2 und 3
Version for equipment group II of category 2 and 3
ATEX-Kennzeichnung: **II 2G / II 2D**
ATEX-marking: **II 3G / II 3D**
Die ausführliche Kennzeichnung ist auf dem Typenschild ausgeführt.
The specific marking is noted on the nameplate.

Diese Erklärung bescheinigt die Übereinstimmung mit den genannten Richtlinien, ist jedoch keine Beschaffenheits- oder Haltbarkeitsgarantie.
This declaration is an attestation of conformity with the indicated Directive(s) but does not imply any guarantee of quality or durability.
Die Sicherheitshinweise der mitgelieferten Produktdokumentation sind zu beachten.
The safety instructions of the accompanying product documentation shall be observed.

Copyright (©) Innomotics GmbH; 2024; All rights reserved

EU-Konformitätserklärung / *EU-declaration of conformity*

Nr. / *No.* A5E43968284AF

Die Innomotics GmbH hinterlegt die gemäß 2014/34/EU Anhang VIII geforderten Unterlagen bei der benannten Stelle:
The Innomotics GmbH deposit the documents required in accordance with 2014/34/EU Annex VIII with the notified body:

Name, Adresse *Name, address*	TÜV SÜD Product Service GmbH Ridlerstraße 65 80339 München Deutschland
Kenn-Nummer: *Approved body number:*	0123
Bescheinigung: *Certificate:*	EX9A 123685 0003

Weitere Angaben über die Einhaltung dieser Richtlinie(n) enthält der Anhang, der ein integraler Bestandteil dieser Konformitätserklärung ist.
Further information about the conformity to this Directive(s) is given in the annex, which is an integral part of this declaration of conformity.

Unterzeichnet für und im Namen von:/ *Signed for and on behalf of:*
Innomotics GmbH

Tübingen, 22. Juli 2024
Ort / *place*, Datum der Ausstellung / *date of issue*

Tasarsu Kaan Takuma
Digital unterschrieben von Tasarsu Kaan Takuma
Datum: 2024.08.07 17:22:26 +02'00'

i. V. Kaan Tasarsu
Head GM

Chen Xingjian
Digitally signed by Chen Xingjian
Date: 2024.08.05 11:56:15 +02'00'

i. V. Xingjian Chen
Head Research & Development GM

Diese Erklärung bescheinigt die Übereinstimmung mit den genannten Richtlinien, ist jedoch keine Beschaffenheits- oder Haltbarkeitsgarantie.
This declaration is an attestation of conformity with the indicated Directive(s) but does not imply any guarantee of quality or durability.
Die Sicherheitshinweise der mitgelieferten Produktdokumentation sind zu beachten.
The safety instructions of the accompanying product documentation shall be observed.

Copyright (©) Innomotics GmbH; 2024; All rights reserved

Anhang / *Annex*
zur EU-Konformitätserklärung / *to EU-declaration of conformity*

Nr. / *No.* A5E43968284AF

Produktbezeichnung: Getriebe mit Adapter 2KJ3...
Product identification: Gearbox with adapter 2KJ3...

Die Übereinstimmung des bezeichneten Produkts mit den Vorschriften der angewandten Richtlinie(n) wird nachgewiesen durch die vollständige Einhaltung folgender Normen / Vorschriften:
The conformity of the designated product with the provisions of the applied Directive(s) is proved by full compliance with the following standards / regulations:

Harmonisierte Normen / *Harmonized standards*:

Referenznummer *Reference number*	Ausgabedatum *Date of issue*	Referenznummer *Reference number*	Ausgabedatum *Date of issue*
EN ISO 80079-36.....	2016.....	.....	.....
EN ISO 80079-37.....	2016.....	.....	.....
.....	.....	.....	.....
.....	.....	.....	.....

Sonstige technische Normen, Spezifikationen / *other technical standards, specifications*:

Referenznummer *Reference number*	Ausgabedatum *Date of issue*	Referenznummer *Reference number*	Ausgabedatum *Date of issue*
.....	.....	.....	.....
.....	.....	.....	.....
.....	.....	.....	.....
.....	.....	.....	.....

Diese Erklärung bescheinigt die Übereinstimmung mit den genannten Richtlinien, ist jedoch keine Beschaffenheits- oder Haltbarkeitsgarantie.
This declaration is an attestation of conformity with the indicated Directive(s) but does not imply any guarantee of quality or durability.
Die Sicherheitshinweise der mitgelieferten Produktdokumentation sind zu beachten.
The safety instructions of the accompanying product documentation shall be observed.

Copyright (©) Innomotics GmbH; 2024; All rights reserved

Einbauerklärung / EU-Konformitätserklärung
Declaration of incorporation / EU-declaration of conformity

Nr. / *No.* A5E36964102AM

Produktbezeichnung: *Product identification:*	Getriebemotor 2KJ3... *Geared motor 2KJ3...*
Typ: *Type:*	A... – BCD... EF... – G... – H... – I... – J...
Getriebe: *Gearbox:*	A... = [A = E, Z, D, F, B, K, C, S]
Motor: *Motor:*	BCD... EF... = [B = L, M; C = E, B; D = _, I, S; E = _, M; F = _, F, I, U]
Bremse: *Brake:*	G... = [G = _, L, F]
Drehgeber: *Encoder:*	H... = [H = _, I, S, M]
Funktionale Sicherheit: *Functional safety:*	I... = [I = _, S]
ATEX-Ausführung: *ATEX-Version:*	J... = [J = _, 1]
Hersteller: *Manufacturer:*	Innomotics GmbH
Anschrift: *Address:*	Bahnhofstraße 40 DE-72072 Tübingen

Name, Anschrift bevollmächtigte Person für technische Unterlagen:
Name, address of authorised person for technical file:

Innomotics GmbH
Xingjian Chen
Bahnhofstraße 40
DE-72072 Tübingen

Die alleinige Verantwortung für die Ausstellung dieser Erklärung trägt der Hersteller.

This declaration is issued under the sole responsibility of the manufacturer.

Der oben beschriebene Gegenstand der Erklärung erfüllt die einschlägigen Harmonisierungsrechtsvorschriften der Union:

The object of the declaration described above is in conformity with the relevant Union harmonisation legislation:

Maschinenrichtlinie:

2006/42/EG Richtlinie des Europäischen Parlaments und des Rates vom 17. Mai 2006 über Maschinen und zur Änderung der Richtlinie 95/16/EG; Amtsblatt der EU L157, 9/6/2006, S. 24–86

Machinery Directive:

2006/42/EC *Directive of the European Parliament and of the Council of 17 May 2006 on machinery, and amending Directive 95/16/EC; Official Journal of the EU L157, 9/6/2006, p. 24–86*

EMV-Richtlinie:

2014/30/EU Richtlinie des Europäischen Parlaments und des Rates vom 26. Februar 2014 zur Harmonisierung der Rechtsvorschriften der Mitgliedstaaten über die elektromagnetische Verträglichkeit; Amtsblatt der EU L96, 29/03/2014, S. 79–106

EMC Directive:

2014/30/EU *Directive of the European Parliament and of the Council of 26 February 2014 on the harmonisation of the laws of the Member States relating to electromagnetic compatibility; Official Journal of the EU L96, 29/03/2014, p. 79–106*

Diese Erklärung bescheinigt die Übereinstimmung mit den genannten Richtlinien, ist jedoch keine Beschaffenheits- oder Haltbarkeitsgarantie.
Die Sicherheitshinweise der mitgelieferten Produktdokumentation sind zu beachten.

This declaration is an attestation of conformity with the indicated Directive(s) but does not imply any guarantee of quality or durability.
The safety instructions of the accompanying product documentation shall be observed.

Copyright (©) Innomotics GmbH; 2023; All rights reserved

Einbauerklärung / EU-Konformitätserklärung
Declaration of incorporation / EU-declaration of conformity

Nr. / *No.* A5E36964102AM

RoHS-Richtlinie:

2011/65/EU Richtlinie des Europäischen Parlaments und des Rates vom 8. Juni 2011 zur Beschränkung der Verwendung bestimmter gefährlicher Stoffe in Elektro- und Elektronikgeräten; Amtsblatt der EU L174, 1/7/2011, S. 88–110

RoHS Directive:

2011/65/EU *Directive of the European Parliament and of the Council of 8 June 2011 on the restriction of the use of certain hazardous substances in electrical and electronic equipment; Official Journal of the EU L174, 1/7/2011, p. 88–110*

Verordnung (EU) Nr. 2019/1781*:

Verordnung der Kommission vom 1. Oktober 2019 zur Festlegung von Ökodesign-Anforderungen an Elektromotoren und Drehzahlregelungen gemäß der Richtlinie 2009/125/EG des Europäischen Parlaments und des Rates; Amtsblatt der EU L272, 25/10/2019, S. 74–94

Regulation (EU) No. 2019/1781*:

Commission Regulation of 1 October 2019 laying down ecodesign requirements for electric motors and variable speed drives pursuant to Directive 2009/125/EC of the European Parliament and of the Council; Official Journal of the EU L272, 25/10/2019, p. 74–94

Verordnung (EU) Nr. 327/2011:

Verordnung der Kommission vom 30. März 2011 zur Durchführung der Richtlinie 2009/125/EG des Europäischen Parlaments und des Rates im Hinblick auf die Festlegung von Anforderungen an die umweltgerechte Gestaltung von Ventilatoren, die durch Motoren mit einer elektrischen Eingangsleistung zwischen 125 W und 500 kW angetrieben werden; Amtsblatt der EU L90, 6/4/2011, S. 8–21

Regulation (EU) No. 327/2011:

Commission Regulation of 30 March 2011 implementing Directive 2009/125/EC of the European Parliament and of the Council with regard to ecodesign requirements for fans driven by motors with an electric input power between 125 W and 500 kW; Official Journal of the EU L90, 6/4/2011, p. 8–21

Weitere Angaben über die Einhaltung dieser Richtlinie(n) enthalten Anhang MR1 und MR2, die ein integraler Bestandteil dieser Erklärung sind.

Further information about the conformity to this Directive(s) is given in Annex MR1 and MR2 which are integral parts of this declaration.

* - Die Verordnung (EU) Nr. 2019/1781 wird nur für die Produkte erklärt, welche in deren Anwendungsbereich fallen. Erfasst sind Motoren, die gemäß den Angaben auf dem jeweiligen Typenschild für den Betrieb mit einer Frequenz von 50Hz, 60Hz, 50/60Hz, mit einer Nennspannung UN von mehr als 50 V und bis zu 1000 V sowie einer Nennausgangsleistung PN von 0,12 kW bis einschließlich 1000 kW in der Betriebsart Dauerbetrieb ausgelegt sind sowie zwei, vier, sechs oder acht Pole aufweisen und nicht vollständig geschlossen unbelüftet (TENV) sind.

** - Regulation (EU) No. 2019/1781 is declared only for the products that fall within its scope. Covered are motors that, according to the information on the respective nameplate, are designed to operate at a frequency of 50Hz, 60Hz, 50/60Hz, with a nominal voltage UN of more than 50 V and up to 1000 V and a nominal output power PN of 0.12 kW up to and including 1000 kW in the continuous operation mode and have two, four, six or eight poles and are not totally enclosed non-ventilated (TENV).*

Diese Erklärung bescheinigt die Übereinstimmung mit den genannten Richtlinien, ist jedoch keine Beschaffenheits- oder Haltbarkeitsgarantie.
Die Sicherheitshinweise der mitgelieferten Produktdokumentation sind zu beachten.

This declaration is an attestation of conformity with the indicated Directive(s) but does not imply any guarantee of quality or durability.
The safety instructions of the accompanying product documentation shall be observed.

Copyright (©) Innomotics GmbH; 2023; All rights reserved

Einbauerklärung
Declaration of incorporation

Nr. / *No.* A5E36964102AM

Das bezeichnete Produkt ist eine unvollständige Maschine im Sinne von Art. 2 g) der Richtlinie 2006/42/EG. Sie ist nur dazu bestimmt, in andere Maschinen oder in andere unvollständige Maschinen oder Ausrüstungen eingebaut oder mit ihnen zusammengefügt zu werden.
The designated product is a partly completed machinery in the sense of Art 2 g) of Directive 2006/42/EC. It is only intended to be incorporated into or assembled with other machinery or other partly completed machinery or equipment.

Die relevanten, angewendeten und eingehaltenen grundlegenden Anforderungen nach Anhang I der Richtlinie 2006/42/EG sind im Anhang MR2 zu dieser Erklärung aufgeführt.
The relevant, applied and fulfilled essential requirements of Annex I of Directive 2006/42/EC are listed in Annex MR2 of this declaration.

Die speziellen technischen Unterlagen nach Anhang VII, B der Richtlinie 2006/42/EG wurden erstellt und werden den Behörden auf begründete Anforderung in ☒ elektronischer / ☐ Papierform zur Verfügung gestellt.
The relevant technical documentation according to Annex VII, B of Directive 2006/42/EC has been compiled and will be provided to the authorities upon request in ☒ electronic / ☐ paper form.

Die unvollständige Maschine darf erst dann in Betrieb genommen werden, wenn gegebenenfalls festgestellt wurde, dass die Maschine, in die die unvollständige Maschine eingebaut werden soll, den Bestimmungen der Maschinenrichtlinie 2006/42/EG entspricht.
The partly completed machinery must not be put into service until the final machinery into which it is to be incorporated has been declared in conformity with the provisions of Directive 2006/42/EC, where appropriate.

Unterzeichnet für und im Namen von: / *Signed for and on behalf of:*
Innomotics GmbH

Tübingen, 18. September 2023
Ort / *place*, Datum der Ausstellung / *date of issue*

Tasarsu Kaan Takuma
Digital unterschrieben von Tasarsu Kaan Takuma
Datum: 2023.10.19 18:20:31 +02'00'

i. V. Kaan Tasarsu
Head GM

Chen Xingjian
Digital signiert von Chen Xingjian
DN: cn=Chen Xingjian, o=Siemens, email=xingjian.chen@siemens.com
Grund: Ich bin mit den angegebenen Teilen dieses Dokuments einverstanden
Datum: 2023.09.20 18:35:10 +02'00'

i. V. Xingjian Chen
Head Research & Development GM

Diese Erklärung bescheinigt die Übereinstimmung mit den genannten Richtlinien, ist jedoch keine Beschaffenheits- oder Haltbarkeitsgarantie.
Die Sicherheitshinweise der mitgelieferten Produktdokumentation sind zu beachten.

This declaration is an attestation of conformity with the indicated Directive(s) but does not imply any guarantee of quality or durability.
The safety instructions of the accompanying product documentation shall be observed.

Copyright (©) Innomotics GmbH; 2023; All rights reserved

Anhang MR1 / Annex MR1
zur Einbauerklärung / EU-Konformitätserklärung
to the declaration of incorporation / EU-declaration of conformity

Nr. / *No.* A5E36964102AM

Produktbezeichnung: Getriebemotor 2KJ3...
Product identification: Geared motor 2KJ3...

Die Übereinstimmung des bezeichneten Produkts mit den Vorschriften der angewandten Richtlinie(n) wird nachgewiesen durch die vollständige Einhaltung folgender Normen / Vorschriften:
The conformity of the designated product with the provisions of the applied Directive(s) is proved by full compliance with the following standards / regulations:

Harmonisierte Normen / *Harmonized standards*:

Referenznummer *Reference number*	Ausgabedatum *Date of issue*	Referenznummer *Reference number*	Ausgabedatum *Date of issue*
EN ISO 12100	2010	EN 60034-1*	2010+AC:2010.
EN 61800-5-2**	2017		
EN ISO 13849-1**	2015		
EN 61800-3***	2004+A1:2012		
EN IEC 63000	2018		

* - und alle relevanten Teile und Ergänzungen / and all relevant parts and supplements
** - trifft nur zu bei Typ / applies to type only: I = S, M
*** - trifft nur zu bei Typ / applies to type only: H = I, S, M; E = M

Sonstige technische Normen, Spezifikationen / *other technical standards, specifications*:

Referenznummer *Reference number*	Ausgabedatum *Date of issue*	Referenznummer *Reference number*	Ausgabedatum *Date of issue*

Diese Erklärung bescheinigt die Übereinstimmung mit den genannten Richtlinien, ist jedoch keine Beschaffenheits- oder Haltbarkeitsgarantie.
Die Sicherheitshinweise der mitgelieferten Produktdokumentation sind zu beachten.

This declaration is an attestation of conformity with the indicated Directive(s) but does not imply any guarantee of quality or durability.
The safety instructions of the accompanying product documentation shall be observed.

Copyright (©) Innomotics GmbH; 2023; All rights reserved

Anhang MR2
zur Einbauerklärung

Nr. A5E36964102AM

Produktbezeichnung: Getriebemotor 2KJ3...

Die folgenden grundlegenden Sicherheits- und Gesundheitsschutzanforderungen der Richtlinie 2006/42/EG, Anh. I, sind für die oben genannte unvollständige Maschine relevant und wurden entsprechend der Angabe in Spalte 3 erfüllt bzw. zeigen noch Restgefahren, die vom Hersteller der Gesamtmaschine zu beachten sind. Die für das Produkt nicht relevanten Risiken sind nicht aufgeführt.

2006/42/EG Anh. I	**Bezeichnung**	**Anforderung erfüllt**	
		j/n	**Weitere Hinweise**
1	**Grundlegende Sicherheits- und Gesundheitsschutzanforderungen**		
1.1.2	Grundsätze für die Integration der Sicherheit	j	
1.1.3	Materialien und Produkte	j	
1.1.5	Konstruktion der Maschine im Hinblick auf die Handhabung	j	
1.3	**Schutzmaßnahmen gegen mechanische Gefährdungen**		
1.3.1	Risiko des Verlusts der Standsicherheit	j	
1.3.2	Bruchrisiko beim Betrieb	j	
1.3.3	Risiken durch herabfallende oder herausgeschleuderte Gegenstände	j	
1.3.4	Risiken durch Oberflächen, Kanten und Ecken	j	
1.3.8.1	Bewegliche Teile der Kraftübertragung	j	
1.4	**Anforderungen an Schutzeinrichtungen**		
1.4.1	Allgemeine Anforderungen	j	
1.4.2	Besondere Anforderungen an trennende Schutzeinrichtungen	j	
1.4.2.1	Feststehende trennende Schutzeinrichtungen	j	
1.5	**Risiken durch sonstige Gefährdungen**		
1.5.1	Elektrische Energieversorgung	j	Einhaltung der Schutzziele Richtlinie 2014/35/EU
1.5.2	Statische Elektrizität	j	
1.5.4	Montagefehler	j	
1.5.5	Extreme Temperaturen	j	
1.5.6	Brand	j	
1.5.8	Lärm	j	
1.5.9	Vibrationen	j	
1.5.13	Emission gefährlicher Werkstoffe und Substanzen	j	

Diese Erklärung bescheinigt die Übereinstimmung mit den genannten Richtlinien, ist jedoch keine Beschaffenheits- oder Haltbarkeitsgarantie.
Die Sicherheitshinweise der mitgelieferten Produktdokumentation sind zu beachten.

This declaration is an attestation of conformity with the indicated Directive(s) but does not imply any guarantee of quality or durability.
The safety instructions of the accompanying product documentation shall be observed.

Copyright (©) Innomotics GmbH; 2023; All rights reserved

Anhang MR2
zur Einbauerklärung

Nr. A5E36964102AM

1.6	**Instandhaltung**		
1.6.1	Wartung der Maschine	j	
1.6.2	Zugang zu den Bedienungsständen und den Eingriffspunkten für die Instandhaltung	j	
1.7	**Informationen**		
1.7.1	Informationen und Warnhinweise an der Maschine	j	
1.7.2	Warnung vor Restrisiken	j	
1.7.3	Kennzeichnung der Maschinen	j	
1.7.4	Betriebsanleitung	j	
1.7.4.1	Allgemeine Grundsätze für die Abfassung der Betriebsanleitung	j	
1.7.4.2	Inhalt der Betriebsanleitung	j	
1.7.4.3	Verkaufsprospekte	j	

Diese Erklärung bescheinigt die Übereinstimmung mit den genannten Richtlinien, ist jedoch keine Beschaffenheits- oder Haltbarkeitsgarantie.
Die Sicherheitshinweise der mitgelieferten Produktdokumentation sind zu beachten.

This declaration is an attestation of conformity with the indicated Directive(s) but does not imply any guarantee of quality or durability.
The safety instructions of the accompanying product documentation shall be observed.

Copyright (©) Innomotics GmbH; 2023; All rights reserved

Annex MR2
to the declaration of incorporation

No. A5E36964102AM

Product identification: Geared motor 2KJ3...

The following essential health and safety requirements of Directive 2006/42/EG, Annex I are relevant for the identified uncompleted machinery. According to the remarks in column 3 they have been solved respectively bear residual hazards which have to be covered by the manufacturer of the final machinery. Risks, not being relevant for the uncompleted machinery are not listed.

2006/42/EC Annex I	**Denotation**	**Requirement fulfilled**	
		y/n	**Additional remark**
1	**Essential health and safety requirements**		
1.1.2	Principles of safety integration	y	
1.1.3	Materials and products	y	
1.1.5	Design of machinery to facilitate its handling	y	
1.3	**Protection against mechanical hazards**		
1.3.1	Risk of loss of stability	y	
1.3.2	Risk of break-up during operation	y	
1.3.3	Risks due to falling or ejected objects	y	
1.3.4	Risks due to surfaces, edges or angles	y	
1.3.8.1	Moving transmission parts	y	
1.4	**Required characteristics of guards and protective devices**		
1.4.1	General requirements	y	
1.4.2	Special requirements for guards	y	
1.4.2.1	Fixed guards	y	
1.5	**Risks due to other hazards**		
1.5.1	Electricity supply	y	Fulfillment of safety objectives of Directive 2014/35/EC
1.5.2	Static electricity	y	
1.5.4	Errors of fitting	y	
1.5.5	Extreme temperatures	y	
1.5.6	Fire	y	
1.5.8	Noise	y	
1.5.9	Vibrations	y	
1.5.13	Emissions of hazardous materials and substances	y	

Diese Erklärung bescheinigt die Übereinstimmung mit den genannten Richtlinien, ist jedoch keine Beschaffenheits- oder Haltbarkeitsgarantie.
Die Sicherheitshinweise der mitgelieferten Produktdokumentation sind zu beachten.

This declaration is an attestation of conformity with the indicated Directive(s) but does not imply any guarantee of quality or durability.
The safety instructions of the accompanying product documentation shall be observed.

Copyright (©) Innomotics GmbH; 2023; All rights reserved

Annex MR2
to the declaration of incorporation

No. A5E36964102AM

1.6	***Maintenance***		
1.6.1	*Machinery maintenance*	*y*	
1.6.2	*Access to operating positions and servicing points*	*y*	
1.7	***Information***		
1.7.1	*Information and warnings on the machinery*	*y*	
1.7.2	*Warning of residual risks*	*y*	
1.7.3	*Marking of machinery*	*y*	
1.7.4	*Instructions*	*y*	
1.7.4.1	*General principles for the drafting of instructions*	*y*	
1.7.4.2	*Contents of the instructions*	*y*	
1.7.4.3	*Sales literature*	*y*	

Diese Erklärung bescheinigt die Übereinstimmung mit den genannten Richtlinien, ist jedoch keine Beschaffenheits- oder Haltbarkeitsgarantie.
Die Sicherheitshinweise der mitgelieferten Produktdokumentation sind zu beachten.

This declaration is an attestation of conformity with the indicated Directive(s) but does not imply any guarantee of quality or durability.
The safety instructions of the accompanying product documentation shall be observed.

Copyright (©) Innomotics GmbH; 2023; All rights reserved

EU-Konformitätserklärung / *EU-declaration of conformity*

Nr. / *No.* A5E43968682AF

Produktbezeichnung: *Product identification:*	Getriebemotor 2KJ3... *Geared motor 2KJ3...*
Typ: *Type:*	A... – BCD... EF... – G... – H... – I... – J...
Getriebe: *Gearbox:*	A... = [A = E, Z, D, F, B, K, C]
Motor: *Motor:*	BCD... EF... = [B = M; C = B; D = _; E = _; F = _, F, I, U]
Bremse: *Brake:*	G... = [G = _, L, F]
Drehgeber: *Encoder:*	H... = [H = _, I]
Funktionale Sicherheit: *Functional Safety:*	I... = [I = _]
ATEX-Ausführung: *ATEX-version:*	J... = [J = _, 1]
Hersteller: *Manufacturer:*	Innomotics GmbH
Anschrift: *Address:*	Bahnhofstraße 40 DE-72072 Tübingen

Die alleinige Verantwortung für die Ausstellung dieser Konformitätserklärung trägt der Hersteller.
This declaration of conformity is issued under the sole responsibility of the manufacturer.

Der oben beschriebene Gegenstand der Erklärung erfüllt die einschlägigen Harmonisierungsrechtsvorschriften der Union:
The object of the declaration described above is in conformity with the relevant Union harmonisation legislation:

2014/34/EU Richtlinie des Europäischen Parlaments und des Rates vom 26. Februar 2014 zur Harmonisierung der Rechtsvorschriften der Mitgliedstaaten für Geräte und Schutzsysteme zur bestimmungsgemäßen Verwendung in explosionsgefährdeten Bereichen; Amtsblatt der EU L96, 29/03/2014, S. 309–356
2014/34/EU *Directive of the European Parliament and of the Council of 26 February 2014 on the harmonisation of the laws of the Member States relating to equipment and protective systems intended for use in potentially explosive atmospheres; Official Journal of the EU L96, 29/03/2014, p. 309–356*

Version der Ausrüstung Gruppe II der Kategorie 3
Version for equipment group II of category 3
ATEX-Kennzeichnung: **II 3G / II 3D**
ATEX-marking:
Die ausführliche Kennzeichnung ist auf dem Typenschild ausgeführt.
The specific marking is noted on the nameplate.

Diese Erklärung bescheinigt die Übereinstimmung mit den genannten Richtlinien, ist jedoch keine Beschaffenheits- oder Haltbarkeitsgarantie.
This declaration is an attestation of conformity with the indicated Directive(s) but does not imply any guarantee of quality or durability.
Die Sicherheitshinweise der mitgelieferten Produktdokumentation sind zu beachten.
The safety instructions of the accompanying product documentation shall be observed.

Copyright (©) Innomotics GmbH; 2024; All rights reserved

EU-Konformitätserklärung / *EU-declaration of conformity*

Nr. / *No.* A5E43968682AF

Die Innomotics GmbH hinterlegt die gemäß 2014/34/EU Anhang VIII geforderten Unterlagen bei der benannten Stelle:
The Innomotics GmbH deposit the documents required in accordance with 2014/34/EU Annex VIII with the notified body:

Name, Adresse *Name, address*	TÜV SÜD Product Service GmbH Ridlerstraße 65 80339 München Deutschland
Kenn-Nummer: *Approved body number:*	0123
Bescheinigung: *Certificate:*	EX9A 123685 0003

Weitere Angaben über die Einhaltung dieser Richtlinie(n) enthält der Anhang, der ein integraler Bestandteil dieser Konformitätserklärung ist.
Further information about the conformity to this Directive(s) is given in the annex, which is an integral part of this declaration of conformity.

Unterzeichnet für und im Namen von:/ *Signed for and on behalf of:*
Innomotics GmbH

Tübingen, 22. Juli 2024
Ort / *place*, Datum der Ausstellung / *date of issue*

Tasarsu Kaan Takuma
Digital unterschrieben von Tasarsu Kaan Takuma
Datum: 2024.08.07 17:23:28 +02'00'

i. V. Kaan Tasarsu
Head GM

Chen Xingjian
Digitally signed by Chen Xingjian
Date: 2024.08.05 11:57:02 +02'00'

i. V. Xingjian Chen
Head Research & Development GM

Diese Erklärung bescheinigt die Übereinstimmung mit den genannten Richtlinien, ist jedoch keine Beschaffenheits- oder Haltbarkeitsgarantie.
This declaration is an attestation of conformity with the indicated Directive(s) but does not imply any guarantee of quality or durability.
Die Sicherheitshinweise der mitgelieferten Produktdokumentation sind zu beachten.
The safety instructions of the accompanying product documentation shall be observed.

Copyright (©) Innomotics GmbH; 2024; All rights reserved

Anhang / *Annex*
zur EU-Konformitätserklärung / *to EU-declaration of conformity*

Nr. / *No.* A5E43968682AF

Produktbezeichnung: Getriebemotor 2KJ3...
Product identification: Geared motor 2KJ3...

Die Übereinstimmung des bezeichneten Produkts mit den Vorschriften der angewandten Richtlinie(n) wird nachgewiesen durch die vollständige Einhaltung folgender Normen / Vorschriften:
The conformity of the designated product with the provisions of the applied Directive(s) is proved by full compliance with the following standards / regulations:

Harmonisierte Normen / *Harmonized standards*:

Referenznummer *Reference number*	Ausgabedatum *Date of issue*	Referenznummer *Reference number*	Ausgabedatum *Date of issue*
EN ISO 80079-36	2016	EN 60079-31	2014
EN ISO 80079-37	2016		
EN IEC 60079-0	2018		
EN IEC 60079-7	2015+A1:2018		

Sonstige technische Normen, Spezifikationen / *other technical standards, specifications*:

Referenznummer *Reference number*	Ausgabedatum *Date of issue*	Referenznummer *Reference number*	Ausgabedatum *Date of issue*

Diese Erklärung bescheinigt die Übereinstimmung mit den genannten Richtlinien, ist jedoch keine Beschaffenheits- oder Haltbarkeitsgarantie.
This declaration is an attestation of conformity with the indicated Directive(s) but does not imply any guarantee of quality or durability.
Die Sicherheitshinweise der mitgelieferten Produktdokumentation sind zu beachten.
The safety instructions of the accompanying product documentation shall be observed.

Copyright (©) Innomotics GmbH; 2024; All rights reserved

Einbauerklärung / EU-Konformitätserklärung
Declaration of incorporation / EU-declaration of conformity

Nr. / *No.* A5E51443210AC

Produktbezeichnung: *Product identification:*	Getriebemotor T1A ... *Geared motor T1A ...*	
Typ: *Type:*	A... – B... – C...;	DEF...
Getriebe mit Adapter: *Gearbox with adapter:*	A... B...	= [A = E, Z, D, F, B, K, C, S] = [B = K]
Motor: *Motor:*	DEF...	= [D = 1; E = F, L, M, P; F = K, T, E, B, H]
Ex-Ausführung: *Ex-Version:*	C...	= [C = _, 1]
Hersteller: *Manufacturer:*	Innomotics GmbH	
Anschrift: *Address:*	Bahnhofstraße 40 DE-72072 Tübingen	

Name, Anschrift bevollmächtigte Person für technische Unterlagen:
Name, address of authorised person for technical file:

Innomotics GmbH
Xingjian Chen
Bahnhofstraße 40
DE-72072 Tübingen

Die alleinige Verantwortung für die Ausstellung dieser Erklärung trägt der Hersteller.

This declaration is issued under the sole responsibility of the manufacturer.

Der oben beschriebene Gegenstand der Erklärung erfüllt die einschlägigen Harmonisierungsrechtsvorschriften der Union:

The object of the declaration described above is in conformity with the relevant Union harmonisation legislation:

Maschinenrichtlinie:

2006/42/EG Richtlinie des Europäischen Parlaments und des Rates vom 17. Mai 2006 über Maschinen und zur Änderung der Richtlinie 95/16/EG; Amtsblatt der EU L157, 9/6/2006, S. 24–86

Machinery Directive:

2006/42/EC *Directive of the European Parliament and of the Council of 17 May 2006 on machinery, and amending Directive 95/16/EC; Official Journal of the EU L157, 9/6/2006, p. 24–86*

RoHS-Richtlinie:

2011/65/EU Richtlinie des Europäischen Parlaments und des Rates vom 8. Juni 2011 zur Beschränkung der Verwendung bestimmter gefährlicher Stoffe in Elektro- und Elektronikgeräten; Amtsblatt der EU L174, 1/7/2011, S. 88–110

RoHS Directive:

2011/65/EU *Directive of the European Parliament and of the Council of 8 June 2011 on the restriction of the use of certain hazardous substances in electrical and electronic equipment; Official Journal of the EU L174, 1/7/2011, p. 88–110*

Diese Erklärung bescheinigt die Übereinstimmung mit den genannten Richtlinien, ist jedoch keine Beschaffenheits- oder Haltbarkeitsgarantie.
Die Sicherheitshinweise der mitgelieferten Produktdokumentation sind zu beachten.

This declaration is an attestation of conformity with the indicated Directive(s) but does not imply any guarantee of quality or durability.
The safety instructions of the accompanying product documentation shall be observed.

Copyright (©) Innomotics GmbH; 2023; All rights reserved

Einbauerklärung / EU-Konformitätserklärung
Declaration of incorporation / EU-declaration of conformity

Nr. / *No.*A5E51443210AC

Verordnung (EU) Nr. 2019/1781*:
Verordnung der Kommission vom 1. Oktober 2019 zur Festlegung von Ökodesign-Anforderungen an Elektromotoren und Drehzahlregelungen gemäß der Richtlinie 2009/125/EG des Europäischen Parlaments und des Rates; Amtsblatt der EU
L272, 25/10/2019, S. 74–94

Regulation (EU) No. 2019/1781*:
Commission Regulation of 1 October 2019 laying down ecodesign requirements for electric motors and variable speed drives pursuant to Directive 2009/125/EC of the European Parliament and of the Council; Official Journal of the EU L272, 25/10/2019, p. 74–94

Weitere Angaben über die Einhaltung dieser Richtlinie(n) enthalten Anhang MR1 und MR2, die ein integraler Bestandteil dieser Erklärung sind.

Further information about the conformity to this Directive(s) is given in Annex MR1 and MR2 which are integral parts of this declaration.

* - Die Verordnung (EU) Nr. 2019/1781 wird nur für die Produkte erklärt, welche in deren Anwendungsbereich fallen. Erfasst sind Motoren, die gemäß den Angaben auf dem jeweiligen Typenschild für den Betrieb mit einer Frequenz von 50Hz, 60Hz, 50/60Hz, mit einer Nennspannung UN von mehr als 50 V und bis zu 1000 V sowie einer Nennausgangsleistung PN von 0,12 kW bis einschließlich 1000 kW in der Betriebsart Dauerbetrieb ausgelegt sind sowie zwei, vier, sechs oder acht Pole aufweisen und nicht vollständig geschlossen unbelüftet (TENV) sind.

** - Regulation (EU) No. 2019/1781 is declared only for the products that fall within its scope. Covered are motors that, according to the information on the respective nameplate, are designed to operate at a frequency of 50Hz, 60Hz, 50/60Hz, with a nominal voltage UN of more than 50 V and up to 1000 V and a nominal output power PN of 0.12 kW up to and including 1000 kW in the continuous operation mode and have two, four, six or eight poles and are not totally enclosed non-ventilated (TENV).*

Diese Erklärung bescheinigt die Übereinstimmung mit den genannten Richtlinien, ist jedoch keine Beschaffenheits- oder Haltbarkeitsgarantie.
Die Sicherheitshinweise der mitgelieferten Produktdokumentation sind zu beachten.

This declaration is an attestation of conformity with the indicated Directive(s) but does not imply any guarantee of quality or durability.
The safety instructions of the accompanying product documentation shall be observed.

Copyright (©) Innomotics GmbH; 2023; All rights reserved

Einbauerklärung
Declaration of incorporation

Nr. / *No.* A5E51443210AC

Das bezeichnete Produkt ist eine unvollständige Maschine im Sinne von Art. 2 g) der Richtlinie 2006/42/EG. Sie ist nur dazu bestimmt, in andere Maschinen oder in andere unvollständige Maschinen oder Ausrüstungen eingebaut oder mit ihnen zusammengefügt zu werden.
The designated product is a partly completed machinery in the sense of Art 2 g) of Directive 2006/42/EC. It is only intended to be incorporated into or assembled with other machinery or other partly completed machinery or equipment.

Die relevanten, angewendeten und eingehaltenen grundlegenden Anforderungen nach Anhang I der Richtlinie 2006/42/EG sind im Anhang MR2 zu dieser Erklärung aufgeführt.
The relevant, applied and fulfilled essential requirements of Annex I of Directive 2006/42/EC are listed in Annex MR2 of this declaration.

Die speziellen technischen Unterlagen nach Anhang VII, B der Richtlinie 2006/42/EG wurden erstellt und werden den Behörden auf begründete Anforderung in ☒ elektronischer / ☐ Papierform zur Verfügung gestellt.
The relevant technical documentation according to Annex VII, B of Directive 2006/42/EC has been compiled and will be provided to the authorities upon request in ☒ electronic / ☐ paper form.

Die unvollständige Maschine darf erst dann in Betrieb genommen werden, wenn gegebenenfalls festgestellt wurde, dass die Maschine, in die die unvollständige Maschine eingebaut werden soll, den Bestimmungen der Maschinenrichtlinie 2006/42/EG entspricht.
The partly completed machinery must not be put into service until the final machinery into which it is to be incorporated has been declared in conformity with the provisions of Directive 2006/42/EC, where appropriate.

Unterzeichnet für und im Namen von: / *Signed for and on behalf of:*
Innomotics GmbH

Tübingen, 18. September 2023
Ort / *place*, Datum der Ausstellung / *date of issue*

Tasarsu Kaan Takuma
Digital unterschrieben von Tasarsu Kaan Takuma
Datum: 2023.10.19 18:23:09 +02'00'
i. V. Kaan Tasarsu
Head GM

Chen Xingjian
Digital signiert von Chen Xingjian
DN: cn=Chen Xingjian, o=Siemens, email=xingjian.chen@siemens.com
Grund: Ich bin mit den angegebenen Teilen dieses Dokuments einverstanden
Datum: 2023.09.20 18:45:25 +02'00'
i. V. Xingjian Chen
Head Research & Development GM

Diese Erklärung bescheinigt die Übereinstimmung mit den genannten Richtlinien, ist jedoch keine Beschaffenheits- oder Haltbarkeitsgarantie.
Die Sicherheitshinweise der mitgelieferten Produktdokumentation sind zu beachten.

This declaration is an attestation of conformity with the indicated Directive(s) but does not imply any guarantee of quality or durability.
The safety instructions of the accompanying product documentation shall be observed.

Copyright (©) Innomotics GmbH; 2023; All rights reserved

Anhang MR1 / Annex MR1
zur Einbauerklärung / EU-Konformitätserklärung
to the declaration of incorporation / EU-declaration of conformity

Nr. / *No.* A5E51443210AC

Produktbezeichnung: Getriebemotor T1A .....
Product identification: Geared motor T1A .....

Die Übereinstimmung des bezeichneten Produkts mit den Vorschriften der angewandten Richtlinie(n) wird nachgewiesen durch die vollständige Einhaltung folgender Normen / Vorschriften:
The conformity of the designated product with the provisions of the applied Directive(s) is proved by full compliance with the following standards / regulations:

Harmonisierte Normen / *Harmonized standards*:

Referenznummer *Reference number*	Ausgabedatum *Date of issue*	Referenznummer *Reference number*	Ausgabedatum *Date of issue*
EN ISO 12100	2010		
EN IEC 63000	2018		
EN 60034-1*	2010+AC:2010		

* - und alle relevanten Teile und Ergänzungen / and all relevant parts and supplements

Sonstige technische Normen, Spezifikationen / *other technical standards, specifications*:

Referenznummer *Reference number*	Ausgabedatum *Date of issue*	Referenznummer *Reference number*	Ausgabedatum *Date of issue*

Diese Erklärung bescheinigt die Übereinstimmung mit den genannten Richtlinien, ist jedoch keine Beschaffenheits- oder Haltbarkeitsgarantie.
Die Sicherheitshinweise der mitgelieferten Produktdokumentation sind zu beachten.

This declaration is an attestation of conformity with the indicated Directive(s) but does not imply any guarantee of quality or durability.
The safety instructions of the accompanying product documentation shall be observed.

Copyright (©) Innomotics GmbH; 2023; All rights reserved

Anhang MR2
zur Einbauerklärung

Nr. A5E51443210AC

Produktbezeichnung: Getriebemotor T1A .....

Die folgenden grundlegenden Sicherheits- und Gesundheitsschutzanforderungen der Richtlinie 2006/42/EG, Anh. I, sind für die oben genannte unvollständige Maschine relevant und wurden entsprechend der Angabe in Spalte 3 erfüllt bzw. zeigen noch Restgefahren, die vom Hersteller der Gesamtmaschine zu beachten sind. Die für das Produkt nicht relevanten Risiken sind nicht aufgeführt.

2006/42/EG Anh. I	**Bezeichnung**	**Anforderung erfüllt**	
		j/n	**Weitere Hinweise**
1	**Grundlegende Sicherheits- und Gesundheitsschutzanforderungen**		
1.1.2	Grundsätze für die Integration der Sicherheit	j	
1.1.3	Materialien und Produkte	j	
1.1.5	Konstruktion der Maschine im Hinblick auf die Handhabung	j	
1.3	**Schutzmaßnahmen gegen mechanische Gefährdungen**		
1.3.1	Risiko des Verlusts der Standsicherheit	j	
1.3.2	Bruchrisiko beim Betrieb	j	
1.3.3	Risiken durch herabfallende oder herausgeschleuderte Gegenstände	j	
1.3.4	Risiken durch Oberflächen, Kanten und Ecken	j	
1.3.7	Risiken durch bewegliche Teile	j	
1.3.8.1	Bewegliche Teile der Kraftübertragung	j	
1.5	**Risiken durch sonstige Gefährdungen**		
1.5.1	Elektrische Energieversorgung	j	Einhaltung der Schutzziele Richtlinie 2014/35/EU
1.5.2	Statische Elektrizität	j	
1.5.4	Montagefehler	j	
1.5.5	Extreme Temperaturen	j	
1.5.6	Brand	j	
1.5.7	Explosion	j	
1.5.8	Lärm	j	
1.5.9	Vibrationen	j	
1.5.13	Emission gefährlicher Werkstoffe und Substanzen	j	

Diese Erklärung bescheinigt die Übereinstimmung mit den genannten Richtlinien, ist jedoch keine Beschaffenheits- oder Haltbarkeitsgarantie.
Die Sicherheitshinweise der mitgelieferten Produktdokumentation sind zu beachten.

This declaration is an attestation of conformity with the indicated Directive(s) but does not imply any guarantee of quality or durability.
The safety instructions of the accompanying product documentation shall be observed.

Copyright (©) Innomotics GmbH; 2023; All rights reserved

Anhang MR2
zur Einbauerklärung

Nr. A5E51443210AC

1.6	**Instandhaltung**		
1.6.1	Wartung der Maschine	j	Siehe Montage- / Betriebsanleitung
1.7	**Informationen**		
1.7.1	Informationen und Warnhinweise an der Maschine	j	Siehe Montage- / Betriebsanleitung
1.7.2	Warnung vor Restrisiken	j	Siehe Montage- / Betriebsanleitung
1.7.3	Kennzeichnung der Maschinen	j	
1.7.4	Betriebsanleitung	j	
1.7.4.1	Allgemeine Grundsätze für die Abfassung der Betriebsanleitung	j	
1.7.4.2	Inhalt der Betriebsanleitung	j	
1.7.4.3	Verkaufsprospekte	j	

Diese Erklärung bescheinigt die Übereinstimmung mit den genannten Richtlinien, ist jedoch keine Beschaffenheits- oder Haltbarkeitsgarantie.
Die Sicherheitshinweise der mitgelieferten Produktdokumentation sind zu beachten.

This declaration is an attestation of conformity with the indicated Directive(s) but does not imply any guarantee of quality or durability.
The safety instructions of the accompanying product documentation shall be observed.

Copyright (©) Innomotics GmbH; 2023; All rights reserved

Annex MR2
to the declaration of incorporation

No. A5E51443210AC

Product identification: Geared motor T1A .....

The following essential health and safety requirements of Directive 2006/42/EG, Annex I are relevant for the identified uncompleted machinery. According to the remarks in column 3 they have been solved respectively bear residual hazards which have to be covered by the manufacturer of the final machinery. Risks, not being relevant for the uncompleted machinery are not listed.

2006/42/EC Annex I	**Denotation**	**Requirement fulfilled**	
		y/n	**Additional remark**
1	**Essential health and safety requirements**		
1.1.2	Principles of safety integration	y	
1.1.3	Materials and products	y	
1.1.5	Design of machinery to facilitate its handling	y	
1.3	**Protection against mechanical hazards**		
1.3.1	Risk of loss of stability	y	
1.3.2	Risk of break-up during operation	y	
1.3.3	Risks due to falling or ejected objects	y	
1.3.4	Risks due to surfaces, edges or angles	y	
1.3.7	Risks related to moving parts	y	
1.3.8.1	Moving transmission parts	y	
1.5	**Risks due to other hazards**		
1.5.1	Electricity supply	y	Fulfillment of safety objectives of Directive 2014/35/EC
1.5.2	Static electricity	y	
1.5.4	Errors of fitting	y	
1.5.5	Extreme temperatures	y	
1.5.6	Fire	y	
1.5.7	Explosion	y	
1.5.8	Noise	y	
1.5.9	Vibrations	y	
1.5.13	Emissions of hazardous materials and substances	y	

Diese Erklärung bescheinigt die Übereinstimmung mit den genannten Richtlinien, ist jedoch keine Beschaffenheits- oder Haltbarkeitsgarantie.
Die Sicherheitshinweise der mitgelieferten Produktdokumentation sind zu beachten.

This declaration is an attestation of conformity with the indicated Directive(s) but does not imply any guarantee of quality or durability.
The safety instructions of the accompanying product documentation shall be observed.

Copyright (©) Innomotics GmbH; 2023; All rights reserved

Annex MR2
to the declaration of incorporation

No. A5E51443210AC

1.6	**Maintenance**		
1.6.1	*Machinery maintenance*	*y*	*See assembly- / maintenance instructions*
1.7	**Information**		
1.7.1	*Information and warnings on the machinery*	*y*	*See assembly- / maintenance instructions*
1.7.2	*Warning of residual risks*	*y*	*See assembly- / maintenance instructions*
1.7.3	*Marking of machinery*	*y*	
1.7.4	*Instructions*	*y*	
1.7.4.1	*General principles for the drafting of instructions*	*y*	
1.7.4.2	*Contents of the instructions*	*y*	
1.7.4.3	*Sales literature*	*y*	

Diese Erklärung bescheinigt die Übereinstimmung mit den genannten Richtlinien, ist jedoch keine Beschaffenheits- oder Haltbarkeitsgarantie.
Die Sicherheitshinweise der mitgelieferten Produktdokumentation sind zu beachten.

This declaration is an attestation of conformity with the indicated Directive(s) but does not imply any guarantee of quality or durability.
The safety instructions of the accompanying product documentation shall be observed.

Copyright (©) Innomotics GmbH; 2023; All rights reserved

EU-Konformitätserklärung / *EU-declaration of conformity*

Nr. / *No.* A5E51443228AD

Produktbezeichnung: *Product identification:*	Getriebemotor T1A... *Geared motor T1A...*
Typ: *Type::*	A... – B... – C...; DEF...
Getriebe mit Adapter: *Gearbox with adapter:*	A... = [A = E, Z, D, F, B, K, C, S] B... = [B = K]
Motor: *Motor:*	DEF... = [D = 1; E = M, P; F = B, H]
ATEX-Ausführung: *ATEX-version:*	C... = [C = _, 1]
Hersteller: *Manufacturer:*	Innomotics GmbH
Anschrift: *Address:*	Bahnhofstraße 40 DE-72072 Tübingen

Die alleinige Verantwortung für die Ausstellung dieser Konformitätserklärung trägt der Hersteller.
This declaration of conformity is issued under the sole responsibility of the manufacturer.

Der oben beschriebene Gegenstand der Erklärung erfüllt die einschlägigen Harmonisierungsrechtsvorschriften der Union:
The object of the declaration described above is in conformity with the relevant Union harmonisation legislation:

2014/34/EU Richtlinie des Europäischen Parlaments und des Rates vom 26. Februar 2014 zur Harmonisierung der Rechtsvorschriften der Mitgliedstaaten für Geräte und Schutzsysteme zur bestimmungsgemäßen Verwendung in explosionsgefährdeten Bereichen; Amtsblatt der EU L96, 29/03/2014, S. 309–356
2014/34/EU *Directive of the European Parliament and of the Council of 26 February 2014 on the harmonisation of the laws of the Member States relating to equipment and protective systems intended for use in potentially explosive atmospheres; Official Journal of the EU L96, 29/03/2014, p. 309–356*

Version der Ausrüstung Gruppe II der Kategorie 2 und 3
Version for equipment group II of category 2 and 3

ATEX Kennzeichnung: *ATEX marking*:	**II 2G / II 2D** **II 3G / II 3D**

Die ausführliche Kennzeichnung ist auf dem Typenschild ausgeführt.
The specific marking is noted on the nameplate.

Innomotics GmbH hinterlegt die gemäß 2014/34/EU Anhang VIII geforderten Unterlagen bei der benannten Stelle:
Innomotics GmbH deposit the documents required in accordance with 2014/34/EU Annex VIII with the notified body:

Name, Adresse *Name, address*	TÜV SÜD Product Service GmbH Ridlerstraße 65 80339 München Deutschland
Kenn-Nummer: *Approved body number:*	0123
Bescheinigung: *Certificate:*	EX9A 123685 0003

Diese Erklärung bescheinigt die Übereinstimmung mit den genannten Richtlinien, ist jedoch keine Beschaffenheits- oder Haltbarkeitsgarantie.
Die Sicherheitshinweise der mitgelieferten Produktdokumentation sind zu beachten.

This declaration is an attestation of conformity with the indicated Directive(s) but does not imply any guarantee of quality or durability.
The safety instructions of the accompanying product documentation shall be observed.

Copyright (©) Innomotics GmbH; 2024; All rights reserved

EU-Konformitätserklärung / *EU-declaration of conformity*

Nr. / *No.* A5E51443228AD

Weitere Angaben über die Einhaltung dieser Richtlinie(n) enthält der Anhang, der ein integraler Bestandteil dieser Konformitätserklärung ist.

Further information about the conformity to this Directive(s) is given in the annex, which is an integral part of this declaration of conformity.

Unterzeichnet für und im Namen von:/ *Signed for and on behalf of:*
Innomotics GmbH

Tübingen, 22. Juli 2024
Ort / *place*, Datum der Ausstellung / *date of issue*

Tasarsu Kaan Takuma
Digital unterschrieben von Tasarsu Kaan Takuma
Datum: 2024.08.07 17:24:03 +02'00'

i. V. Kaan Tasarsu
Head GM

Chen Xingjian
Digitally signed by Chen Xingjian
Date: 2024.08.05 11:58:01 +02'00'

i. V. Xingjian Chen
Head Research & Development GM

Diese Erklärung bescheinigt die Übereinstimmung mit den genannten Richtlinien, ist jedoch keine Beschaffenheits- oder Haltbarkeitsgarantie.
Die Sicherheitshinweise der mitgelieferten Produktdokumentation sind zu beachten.

This declaration is an attestation of conformity with the indicated Directive(s) but does not imply any guarantee of quality or durability.
The safety instructions of the accompanying product documentation shall be observed.

Copyright (©) Innomotics GmbH; 2024; All rights reserved

Anhang / *Annex*
zur EU-Konformitätserklärung / *to EU-declaration of conformity*

Nr. / *No.* A5E51443228AD

Produktbezeichnung: Getriebemotor T1A...
Product identification: Geared motor T1A...

Die Übereinstimmung des bezeichneten Produkts mit den Vorschriften der angewandten Richtlinie(n) wird nachgewiesen durch die vollständige Einhaltung folgender Normen / Vorschriften:
The conformity of the designated product with the provisions of the applied Directive(s) is proved by full compliance with the following standards / regulations:

Harmonisierte Normen / *Harmonized standards*:

Referenznummer *Reference number*	Ausgabedatum *Date of issue*	Referenznummer *Reference number*	Ausgabedatum *Date of issue*
EN ISO 80079-36	2016	EN 60079-31	2014
EN ISO 80079-37	2016		
EN IEC 60079-0	2018		
EN IEC 60079-7	2015+A1:2018.		

Sonstige technische Normen, Spezifikationen: / *Other technical standards, specifications*:

Referenznummer *Reference number*	Ausgabedatum *Date of issue*	Referenznummer *Reference number*	Ausgabedatum *Date of issue*

Diese Erklärung bescheinigt die Übereinstimmung mit den genannten Richtlinien, ist jedoch keine Beschaffenheits- oder Haltbarkeitsgarantie.
Die Sicherheitshinweise der mitgelieferten Produktdokumentation sind zu beachten.

This declaration is an attestation of conformity with the indicated Directive(s) but does not imply any guarantee of quality or durability.
The safety instructions of the accompanying product documentation shall be observed.

Copyright (©) Innomotics GmbH; 2024; All rights reserved

INNOMOTICS

Innomotics GmbH
Low Voltage Motors
Geared Motors
Bahnhofstraße 40
72072 Tübingen
Germany

innomotics.com/geared-motors

A-CLP oils for Innomotics SG spur, bevel, parallel shaft geared motors

	Code No.	Table	Update
Standard oils			
-a Mineral oils API I or II	A11 - A17	A-a	21.11.2017
-b Polyglycols	A21 - A27	A-b	21.11.2017
-c Poly-α-olefins	A31 - A37	A-c	01.09.2021
biologically degradable oils			
-d synthetical Ester	A41 - A47	A-d	21.11.2017
physiologically safe oils			
-e Polyglycols	A51 - A57	A-ef	01.08.2025
-f Poly-α-olefins	A61 - A67	A-ef	21.11.2017
B - CLP oils for Innomotics SG worm geared motors			
Standard oils			
-b Polyglycols	B21 - B27	B-b	21.11.2017
physiologically safe oils			
-e Polyglycols	B51 - B57	B-e	21.11.2017
H - roller bearing greases for Innomotics geared motors			
	H13 - H16	H	19.01.2023

Table A-a Standard mineral oils for Innomotics SG helical (Z, D and E), bevel (K) and parallel (F) geared motors - API-group = I or II

Innomotics A5E43774560A	Table A-a Standard mineral oils for Innomotics SG helical (Z, D and E), bevel (K) and parallel (F) geared motors - API-group = I or II	NT 7300 Nov-25

printed lists are not obligatory---the current version is to be found using the following link https://www.innomotics.com/hub/en/109753864

Brand name	Viscosity class DIN ISO 3348 at 40 °C (mm2/s)						
	ISO VG 100	ISO VG 150	ISO VG 220	ISO VG 320	ISO VG 460	ISO VG 680	ISO VG 1000
	Innomotics Code No.						
	A17	A16	A15	A14	A13	A12	A11
	Mineral oils						
Addinol			Gear Oil 220 F ECO GEAR 220 M				
Bantleon			Avilub Gear RSX-F 220				
BayWa AG			TECTROL GEAR CLP PLUS 220				
Bharat Petroleum			MAK Amocam Plus 220				
Castrol			Alpha SP 220 Optigear BM 220				
CEPSA			ENGRANAJES XMP 220				
Chevron			Meropa XL 220				
Cogelsa			ULTRAGEAR EP 220				

Innomotics A5E43774560A	Table A-a Standard mineral oils for Innomotics SG helical (Z, D and E), bevel (K) and parallel (F) geared motors - API-group = I or II	NT 7300 Nov-25

printed lists are not obligatory---the current version is to be found using the following link https://www.innomotics.com/hub/en/109753864

Brand name	Viscosity class DIN ISO 3348 at 40 °C (mm2/s)						
	ISO VG 100	ISO VG 150	ISO VG 220	ISO VG 320	ISO VG 460	ISO VG 680	ISO VG 1000
	Innomotics Code No.						
	A17	A16	A15	A14	A13	A12	A11
	Mineral oils						
Engen Petroleum Ltd.			Gengear XEP 220				
ENI S.P.A			eni Blasia FMP 220				
Fuchs			RENOLIN CLP 220				
			RENOLIN HighGear 220				
			RENOLIN CLP VCI 220				
			RENOLIN CLP Plus 220				
Fuchs Lubritech			GEARMASTER CLP 220				
			GEARMASTER HPGO 220				
GMERI(Guangyan)			GMERI(Guangyan) CH Gear oil 220				
Gulf Oil International			Gulf Gear WT 220				
Hindustan Petroleum			PARTHAN ML 220				
			PARTHAN EP 220 MA				

Innomotics A5E43774560A	Table A-a Standard mineral oils for Innomotics SG helical (Z, D and E), bevel (K) and parallel (F) geared motors - API-group = I or II	NT 7300 Nov-25

printed lists are not obligatory---the current version is to be found using the following link https://www.innomotics.com/hub/en/109753864

Brand name	Viscosity class DIN ISO 3348 at 40 °C (mm2/s)						
	ISO VG 100	ISO VG 150	ISO VG 220	ISO VG 320	ISO VG 460	ISO VG 680	ISO VG 1000
	Innomotics Code No.						
	A17	A16	A15	A14	A13	A12	A11
	Mineral oils						
Indian Oil			Servomesh Gold 220				
Klüber			Klüberoil GEM 1 - 220 N				
Lukoil Lubricants			LUKOIL STEELO 220				
LOTOS OIL			TRANSMIL EXTRA XSP 220				
Mobil			Mobilgear 600 XP 220				
MOL-LUB Ltd.			MOL Ultrans EP 220				
Mosil Lubricants			Gearlube SP-e220				
MOTOREX			GEAR COMPOUND PLUS ISO 220				

Innomotics A5E43774560A	Table A-a Standard mineral oils for Innomotics SG helical (Z, D and E), bevel (K) and parallel (F) geared motors - API-group = I or II	NT 7300 Nov-25

printed lists are not obligatory---the current version is to be found using the following link https://www.innomotics.com/hub/en/109753864

Brand name	Viscosity class DIN ISO 3348 at 40 °C (mm2/s)						
	ISO VG 100	ISO VG 150	ISO VG 220	ISO VG 320	ISO VG 460	ISO VG 680	ISO VG 1000
	Innomotics Code No.						
	A17	A16	A15	A14	A13	A12	A11
	Mineral oils						
OMV OMV R & M			OMV gear HST 220				
Olma d.o.o.			OLMAREDOL FL 220				
PANOLIN® PANOLIN AG			GEAR CLP FL 220				
PERTAMINA Pertamina			MASRI SUPER FLG 220				
galp energia PETROGAL			GALP TRANSGEAR FA 220				
Petrol Ofisi			Gravis MP 220				
PETROMIN Petromin Corporat.			Petromin Gear Lube EPF 220				
PETRONAS Petronas			Petronas Gear FL 220				

Innomotics A5E43774560A	Table A-a Standard mineral oils for Innomotics SG helical (Z, D and E), bevel (K) and parallel (F) geared motors - API-group = I or II	NT 7300 Nov-25

printed lists are not obligatory---the current version is to be found using the following link https://www.innomotics.com/hub/en/109753864

Brand name	Viscosity class DIN ISO 3348 at 40 °C (mm2/s)						
	ISO VG 100	ISO VG 150	ISO VG 220	ISO VG 320	ISO VG 460	ISO VG 680	ISO VG 1000
	Innomotics Code No.						
	A17	A16	A15	A14	A13	A12	A11
	Mineral oils						
Setral			MI-setral-GEAR 220				
Shanghai Hitecrun			HITECSYN MMP 220				
Shell			Omala S2 GX 220				
Sinopec			Great wall 4407 Heavy-Duty Industrial Gear Oil 220 Great Wall AP 220				
Statoil Lubricants			Loadway EP 220				
TOTAL			CARTER XEP 220 CARTER EP 220				
Verkol			GEAROIL CKC 220				

Table A-b Standard PG oils for Innomotics SG helical (Z, D and E), bevel (K and B), parallel (F) geared motors

Innomotics A5E43774560A	Table A-b Standard PG oils for Innomotics SG helical (Z, D and E), bevel (K and B), parallel (F) geared motors	NT 7300 Nov-25

printed lists are not obligatory---the current version is to be found using the following link https://www.innomotics.com/hub/en/109753864

Brand name	Viscosity class DIN ISO 3348 at 40 °C (mm2/s)						
	ISO VG 100	ISO VG 150	ISO VG 220	ISO VG 320	ISO VG 460	ISO VG 680	ISO VG 1000
	Innomotics Code No.						
	A27	A26	A25	A24	A23	A22	A21
	Polyglycols						
BASF			Plurasafe GL Plus 220		Plurasafe GL Plus 460		
BayWa AG			TECTROL GEAR CLP PG 220		TECTROL GEAR CLP PG 460		
Castrol			Tribol 1300 / 220 Optileb GT 1800 / 220 Optigear Synthetic 1300 / 220		Tribol 1300 / 460 Optileb GT 1800 / 460 Optigear Synthetic 1300 / 460		
Fuchs			RENOLIN PG 220		RENOLIN PG 460		
Fuchs Lubritech			GEARMASTER PGP 220		GEARMASTER PGP 460		
Klüber			Klübersynth GH 6 - 220		Klübersynth GH 6 - 460		
MOL-LUB Ltd.			MOL Ultrans Synt WS 220		MOL Ultrans Synt WS 460		

Innomotics A5E43774560A	Table A-b Standard PG oils for Innomotics SG helical (Z, D and E), bevel (K and B), parallel (F) geared motors	NT 7300 Nov-25

printed lists are not obligatory---the current version is to be found using the following link https://www.innomotics.com/hub/en/109753864

Brand name	Viscosity class DIN ISO 3348 at 40 °C (mm2/s)						
	ISO VG 100	ISO VG 150	ISO VG 220	ISO VG 320	ISO VG 460	ISO VG 680	ISO VG 1000
	Innomotics Code No.						
	A27	A26	A25	A24	A23	A22	A21
	Polyglycols						
MOTOREX			MOTOREX GEARSYNT 220		MOTOREX GEARSYNT 460		
Q8 Kuweit Petroleum			Q8 Gade SF 220		Q8 Gade SF 460		

Table A-c Standard PAO oils for Innomotics SG helical (Z, D and E), bevel (K and B), parallel (F) and worm (C and SCQ) geared motors

Innomotics A5E43774560A	Table A-c Standard PAO oils for Innomotics SG helical (Z, D and E), bevel (K and B), parallel (F) and worm (C and SCQ) geared motors	NT 7300 Nov-25

printed lists are not obligatory---the current version is to be found using the following link https://www.innomotics.com/hub/en/109753864

Brand name	Viscosity class DIN ISO 3348 at 40 °C (mm2/s)						
	ISO VG 68	ISO VG 150	ISO VG 220	ISO VG 320	ISO VG 460	ISO VG 680	ISO VG 1000
	Innomotics Code No.						
	A37	A36	A35	A34	A33	A32	A31
	Poly-α-olefins						
ADDINOL	Addinol Eco Gear PAO 68 S		ECO GEAR 220 S		ECO GEAR 460 S		
AMPSOIL			Synthetic Power Transmission EP Gear Oil 220		Synthetic Power Transmission EP Gear Oil 460		
Anderol			Anderol 5220 Plus		Anderol 5460 Plus		
AVIA					AVIA Syntogear PE 460		
Bantleon			Avilub Gear SX 220		Avilub Gear SX 460		
BASF			Emgard Wind P 220 Emgard EP XE 220		Emgard Wind P 460 Emgard EP XE 460		
BayWa AG							
Bel-Ray			Synthetic Gear Oil 220		Synthetic Gear Oil 460		

Innomotics A5E43774560A	Table A-c Standard PAO oils for Innomotics SG helical (Z, D and E), bevel (K and B), parallel (F) and worm (C and SCQ) geared motors	NT 7300 Nov-25

printed lists are not obligatory---the current version is to be found using the following link https://www.innomotics.com/hub/en/109753864

Brand name	Viscosity class DIN ISO 3348 at 40 °C (mm2/s)						
	ISO VG 68	ISO VG 150	ISO VG 220	ISO VG 320	ISO VG 460	ISO VG 680	ISO VG 1000
	Innomotics Code No.						
	A37	A36	A35	A34	A33	A32	A31
	Poly-α-olefins						
Bharat Petroleum			MAK Syngear 220		MAK Syngear 460		
Castrol			Alphasyn EP 220		Alphasyn EP 460		
CEPSA							
Engen Petroleum Ltd.			Gengear SPL A-220		Gengear SPL A-460		
Fuchs	RENOLIN UNISYN XT 68		RENOLIN UNISYN XT 220		RENOLIN UNISYN XT 460		
Fuchs Lubritech					GEARMASTER SYN 460		
Gulf Oil International			Gulf EP Lubricant SY 220		Gulf EP Lubricant SY 460		
Hindustan Petroleum			Parthan EP SA 220		Parthan EP SA 460		

Innomotics A5E43774560A	Table A-c Standard PAO oils for Innomotics SG helical (Z, D and E), bevel (K and B), parallel (F) and worm (C and SCQ) geared motors	NT 7300 Nov-25

printed lists are not obligatory---the current version is to be found using the following link https://www.innomotics.com/hub/en/109753864

Brand name	Viscosity class DIN ISO 3348 at 40 °C (mm2/s)						
	ISO VG 68	ISO VG 150	ISO VG 220	ISO VG 320	ISO VG 460	ISO VG 680	ISO VG 1000
	Innomotics Code No.						
	A37	A36	A35	A34	A33	A32	A31
	Poly-α-olefins						
Indian Oil			Servosyngear Plus 220		Servosyngear Plus 460		
Klüber							
Lubritech Limited			GEP Synogear Super CKT 220		GEP Synogear Super CKT 460		
Lukoil			Lukoil Steelo S 220		Lukoil Steelo S 460		
Mobil			Mobil SHC 630 Mobil SHC Elite 220 Mobil SHC Gear 220		Mobil SHC 634 Mobil SHC Elite 460 Mobil SHC Gear 460		
MOTOREX			GEAR SINTEC CLP 220		GEAR SINTEC CLP 460		
ORLEN OIL			TRANSGEAR PE 220		TRANSGEAR PE 460		
OMV Petrol Ofisi			Gravis SP 220		Gravis SP 460		

Innomotics A5E43774560A	Table A-c Standard PAO oils for Innomotics SG helical (Z, D and E), bevel (K and B), parallel (F) and worm (C and SCQ) geared motors	NT 7300 Nov-25

printed lists are not obligatory---the current version is to be found using the following link https://www.innomotics.com/hub/en/109753864

Brand name	Viscosity class DIN ISO 3348 at 40 °C (mm2/s)						
	ISO VG 68	ISO VG 150	ISO VG 220	ISO VG 320	ISO VG 460	ISO VG 680	ISO VG 1000
	Innomotics Code No.						
	A37	A36	A35	A34	A33	A32	A31
	Poly-α-olefins						
PANOLIN® Swiss Oil Technology PANOLIN AG			TECSYNTH FL 220				
PETRO-CANADA PETRO CANADA			Enduratex Synthetic EP 220		Enduratex Synthetic EP 460		
galp energia PETROGAL			GALP TRANSGEAR SY FA 220		GALP TRANSGEAR SY FA 460		
PETRONAS PETRONAS			Petronas Gear Syn PAO 220		Petronas Gear Syn PAO 460		
PHILLIPS 66 Phillips 66							
ptt Group PTT Public Company			PTT Drivera Synthetic S220		PTT Drivera Synthetic S460		
REPSOL REPSOL YPF			Super Tauro Sintetico 220		Super Tauro Sintetico 460		
setral Competence in Lubricants Setral			SYN-setral-GEAR 220		SYN-setral-GEAR 460		

Innomotics A5E43774560A	Table A-c Standard PAO oils for Innomotics SG helical (Z, D and E), bevel (K and B), parallel (F) and worm (C and SCQ) geared motors	NT 7300 Nov-25

printed lists are not obligatory---the current version is to be found using the following link https://www.innomotics.com/hub/en/109753864

Brand name	Viscosity class DIN ISO 3348 at 40 °C (mm2/s)						
	ISO VG 68	ISO VG 150	ISO VG 220	ISO VG 320	ISO VG 460	ISO VG 680	ISO VG 1000
	Innomotics Code No.						
	A37	A36	A35	A34	A33	A32	A31
	Poly-α-olefins						
Shanghai Hitecrun			HITECSYN SMP Plus 220		HITECSYN SMP Plus 460		
Shell			Shell Omala S4 GXV 220		Shell Omala S4 GXV 460		
SINOPEC			Great Wall AP-S 220 Great Wall 4408 HD 220 Great Wall WT Gearbox Oil 220		Great Wall AP-S 460 Great Wall 4408 HD 460		
TOTAL			CARTER SH 220		CARTER SH 460		

Table A-d Biologically degradable oils for Innomotics SG helical (Z, D and E), bevel (K), parallel (F) geared motors

Innomotics A5E43774560A	Table A-d Biologically degradable oils for Innomotics SG helical (Z, D and E), bevel (K), parallel (F) geared motors	NT 7300 Nov-25

printed lists are not obligatory---the current version is to be found using the following link https://www.innomotics.com/hub/en/109753864

Brand name	Viscosity class DIN ISO 3348 at 40 °C (mm2/s)						
	ISO VG 100	ISO VG 150	ISO VG 220	ISO VG 320	ISO VG 460	ISO VG 680	ISO VG 1000
	Innomotics Code No.						
	A47	A46	A45	A44	A43	A42	A41
	synthetical Esters						
Fuchs			PLANTOGEAR 220 S				

Table A-ef Physiologically safel oils for Innomotics SG helical (Z, D and E), bevel (K and B), parallel (F) geared motors

Innomotics A5E43774560A	Table A-ef Physiologically safel oils for Innomotics SG helical (Z, D and E), bevel (K and B), parallel (F) geared motors	NT 7300 Nov-25

printed lists are not obligatory---the current version is to be found using the following link https://www.innomotics.com/hub/en/109753864

Brand name	Viscosity class DIN ISO 3348 at 40 °C (mm2/s)						
	ISO VG 100	ISO VG 150	ISO VG 220	ISO VG 320	ISO VG 460	ISO VG 680	ISO VG 1000
	Innomotics Code No.						
	A57	A56	A55	A54	A53	A52	A51
	Polyglycols						
BASF			Plurasafe GL FG 220		Plurasafe GL FG 460		
Blaser			FOODOIL GGF 220		FOODOIL GGF 460		
Castrol			Optileb GT 1800 / 220		Optileb GT 1800 / 460		
Fuchs Lubritech			CASSIDA FLUID WG 220		CASSIDA FLUID WG 460		
Klüber	Klübersynth NH 1 6 - 100 Klübersynth UH 1 6 - 100		Klübersynth NH 1 6 - 220 Klübersynth UH 1 6 - 220		Klübersynth UH 1 6 - 460		
PAKELO			Allsint HS 220 No Tox Oil PG 220		Allsint HS 460 No Tox Oil PG 460		
Setral			SYN-setral-GEAR/PGB 220 FD		SYN-setral-GEAR/PGB 460 FD		

Innomotics A5E43774560A	Table A-ef Physiologically safel oils for Innomotics SG helical (Z, D and E), bevel (K and B), parallel (F) geared motors	NT 7300 Nov-25

printed lists are not obligatory---the current version is to be found using the following link https://www.innomotics.com/hub/en/109753864

Brand name	Viscosity class DIN ISO 3348 at 40 °C (mm2/s)						
	ISO VG 100	ISO VG 150	ISO VG 220	ISO VG 320	ISO VG 460	ISO VG 680	ISO VG 1000
	Innomotics Code No.						
	A67	A66	A65	A64	A63	A62	A61
	Poly-α-olefins						

Table B-b Standard PG oils for Innomotics SG worm (C, S and SCQ) geared motors

Innomotics A5E43774560A	Table B-b Standard PG oils for Innomotics SG worm (C, S and SCQ) geared motors	NT 7300 Nov-25

printed lists are not obligatory---the current version is to be found using the following link https://www.innomotics.com/hub/en/109753864

Brand name	Viscosity class DIN ISO 3348 at 40 °C (mm2/s)						
	ISO VG 100	ISO VG 150	ISO VG 220	ISO VG 320	ISO VG 460	ISO VG 680	ISO VG 1000
	Innomotics Code No.						
	B27	B26	B25	B24	B23	B22	B21
	Polyglycols						
BASF			Plurasafe GL Plus 220		Plurasafe GL Plus 460		
Castrol			Tribol 1300 / 220 Optigear Synthetic 1300 / 220		Tribol 1300 / 460 Optigear Synthetic 1300 / 460		
Fuchs			RENOLIN PG 220		RENOLIN PG 460		
Fuchs Lubritech			GEARMASTER PGP 220		GEARMASTER PGP 460		
Klüber			Klübersynth. GH 6 - 220		Klübersynth. GH 6 - 460		
MOL-LUB Ltd.			MOL Ultrans Synt WS 220		MOL Ultrans Synt WS 460		
Q8 Kuweit Petroleum			Q8 Gade SF 220		Q8 Gade SF 460		

Table B-e Physiologically safe oils for Innomotics SG worm (C, S and SCQ) geared motors

Innomotics A5E43774560A	Table B-e Physiologically safe oils for Innomotics SG worm (C, S and SCQ) geared motors	NT 7300 Nov-25

printed lists are not obligatory---the current version is to be found using the following link https://www.innomotics.com/hub/en/109753864

Brand name	Viscosity class DIN ISO 3348 at 40 °C (mm2/s)						
	ISO VG 100	ISO VG 150	ISO VG 220	ISO VG 320	ISO VG 460	ISO VG 680	ISO VG 1000
	Innomotics Code No.						
	B57	B56	B55	B54	B53	B52	B51
	Polyglycols						
BASF			Plurasafe GL FG 220		Plurasafe GL FG 460		
Blaser			FOODOIL GGF 220		FOODOIL GGF 460		
Castrol					Optileb GT 1800 / 460		
Fuchs Lubritech			CASSIDA FLUID WG 220		CASSIDA FLUID WG 460		
Klüber	Klübersynth NH 1 6 - 100 Klübersynth UH 1 6 - 100		Klübersynth NH 1 6 - 220 Klübersynth UH 1 6 - 220		Klübersynth UH 1 6 - 460		
Setral			SYN-setral-GEAR/PGB 220 FD		SYN-setral-GEAR/PGB 460 FD		

Table H Lubricant greases for Innomotics geared motors

Innomotics A5E43774560A	Table H Lubricant greases for Innomotics geared motors	NT 7300 Nov-25

printed lists are not obligatory---the current version is to be found using the following link https://www.innomotics.com/hub/en/109753864

Attention: The compatibility with the used oils has to be tested or asked at the oil-/ grease manufacturer!

Brand name	NLGI class according to DIN 51818			Brand name	NLGI class according to DIN 51818		
	2	1			2	1	
	Innomotics Code No.				Innomotics Code No.		
	H16	H15			H14	H13	
	Mineral oil base / Lithium saponific				Mineral oil base / Lithium saponific		
BP	Energrease LS 2			Mobil			
Castrol	Spheerol AP 2			Shell	Gadus S2 V220 2		
Chevron				SRS			
Schaeffler				TOTAL	Multis EP 2		
Fuchs	Renolit FWA 160 Renolit H 443-HD 88				Mineral oil base / Polyurea saponific		
				Klüber	Petamo GHY 133 N		

Innomotics A5E43774560A	Table H Lubricant greases for Innomotics geared motors					NT 7300 Nov-25
printed lists are not obligatory---the current version is to be found using the following link https://www.innomotics.com/hub/en/109753864						
Attention: The compatibility with the used oils has to be tested or asked at the oil-/ grease manufacturer!						
Brand name	NLGI class according to DIN 51818			Brand name	NLGI class according to DIN 51818	
	2	1			2	1
	Innomotics Code No.				Innomotics Code No.	
	H16	H15			H14	H13
	Mineral oil base / Lithium saponific				Mineral oil base / Lithium saponific	
	semisynth. base oil / calcium sulphonate complex soap				PAO oil base / Bentonit - without saponific material	
Fuchs	Renolit CX-TOM 15 (Nur für Drehzahlen der Wälzlager < 2000 1/min geeignet / Only recommended for speeds of rolling bearings < 2000 rpm)					
	physiologically safe				biologically degradable	
	semisynth. base oil / calcium sulphonate complex soap					
Bremer & Leguil	Cassida Grease GTS 2					
	PAO base / Aluminium c. saponific				Ester base / Calcium/Lithium saponific	
Castrol		OBEEN UF 1		Castrol	Biogrease EP 2	
				Fuchs	PLANTOGEL 2 S	

The requirements on the industry gear oils are permanently increased because of the growing power density of the gear units. Therefore the oil manufacturers develop new and better oil formulations in shorter and shorter time-lags. On these causes the oil approval list for gear units must more frequently adapt to the current situation than in the past and one oil approval is only for five years valid. It is always a decision of the oil manufacturer in the end whether he applies for another release of his oil with extensive tests or whether he possibly puts a new request for an approval with a new oil. Only the oil manufacturer can mention to the user the reason for a cut of his oil from the approval list. The oil manufacturer knows the details of it. Innomotics can only notice that the oil manufacturer has not put any new requests for an approval after expiry for the approved period.

Date	Table	Brand name	Lubricant name	new approval	approval with restricted validity	approval is withdrawn	Brand name changed in	Lubricant name changed in
01.08.2025	A-ef, B-e	Klüber	Klübersynth NH1 6-XXX	X				
19.01.2023	H	Bremer & Leguil GmbH	CASSIDA GREASE GTS 2	X				
01.09.2021	A-c	Fuchs	RENOLIN XT XXX	X				
01.09.2021	A-c	Fuchs	RENOLIN CLP XXX			X		
05.03.2020	H	Fuchs	RENOLIT CX-TOM 15	X				
05.02.2019	H	Fuchs	PLANTOGEL 2 S	X				
10.04.2017	A-c	BASF	Emgard EP XE	X				
05.04.2017	A-c	Anderol	ANDEROL 5150 Plus	X				
31.03.2017	A-a	Fuchs Lubritech	GEARMASTER HPGO	X				
10.03.2017	A-c	Qingdao Copton	COPTON SHC Gear Series			X		
09.03.2017	A-a	BP	Energol GR-XP			X		
08.03.2017	A-c	Cogelsa	ULTRASYNT EP			X		
07.03.2017	A-a	Gazpromneft	Gazpromneft Reductor F			X		
16.02.2017	A-g	IPIRANGA	IPIRANGA SP ULTRA. MPT XXX	X				
15.02.2017	A-c	Petronas	Petronas Gear SYN PAO XXX	X				
08.02.2017	A-a	Fuchs	RENOLIN CLP VCI	X				
19.01.2017	A-c	Total	Carter SH 1000			X		
19.01.2017	E-g	Shell	Gadinia S3 SAE 40	X				
19.01.2017	E-g	Shell	Rimula R3+40		X			
19.01.2017	E-g	Shell	Sirius X 40		X			
19.01.2017	E-g	Shell	Melina 40		X			
19.01.2017	E-g	Shell	Gadinia 40		X			
18.01.2017	A-a	Olma d.o.o	OLMAREDOL FL XXX	X				
16.01.2017	A-c	Shell	Shell Omala S5 Wind 320	X				
06.01.2017	A-a	Verkol	GEAROIL CKC XXX	X				
05.01.2017	A-d	Repsol	Super Tauro GT 320	X				
09.12.2016	A-d	Royal Purple, LLC	Royal Purple Wind Gear 320					Gear Oil 320
31.10.2016	E-g	Aral	Super Kowal SAE 40			X		
31.10.2016	E-g	Texaco	Taro 20 DP 40			X		
26.10.2016	A-c	Gulf Oil International	Gulf EP Lubricant SY 150	X				
26.10.2016	A-c	Repsol	Super Tauro Sintetico 150	X				
19.10.2016	A-c	Cepsa	AEROGEAR SYNT 220 & 460			X		
19.10.2016	A-ef	PAKELO	No Tox Oil PG XXX	X				
19.10.2016	A-ef	PAKELO	Allsint HS XXX	X				
19.10.2016	A-b	PAKELO	No Tox Oil PG XXX			X		
19.10.2016	A-b	PAKELO	Allsint HS XXX			X		
19.10.2016	E-dm	Fuchs	Plantogear 150 S		X			
13.10.2016	A-c	Indian Oil	Servosyngear Plus 150	X				
10.10.2016	A-c	Mobil	Mobil SHC Elite XXX	X				
10.10.2016	A-c	Bharat Petroleum Corp. Ltd.	MAK SYNGEAR 150	X				
06.10.2016	A-a	Shell	Omala S2 GX 100	X				
25.08.2016	A-d	Royal Purple, LLC	Royal Purple Wind Gear 320	X				
23.08.2016	A-a	Bharat Petroleum Corp. Ltd.	MAK Amocam Plus 680	X				
23.08.2016	A-a	Bharat Petroleum Corp. Ltd.	MAK Amocam Plus 150			X		
19.08.2016	A-c	Klüber	Klübersynth GEM 4 - 320 N	X				
12.08.2016	A-d	Starfire	Zephyrus 320	X				
12.08.2016	A-d	Fuchs	PLANTOGEAR 220 S		X			
26.07.2016	A-c	Shell	Omala S4 GXV XXX	X				
27.07.2016	A-a	Petronas	Petronas Gear FL XXX	X				
18.07.2016	A-a	Cogelsa	ULTRAGEAR EP 150			X		
13.07.2016	A-a	GMERI(Guangyan)	GMERI(Guangyan) CH Gear oil	X				

Date	Table	Brand name	Lubricant name	new approval	approval with restricted validity	approval is withdrawn	Brand name changed in	Lubricant name changed in
12.07.2016	A-g	Hicks Oils & Hicksgas	Venom® Wind Turbine Oil ISO	X				
17.06.2016	A-g	Gazpromneft	Reductor F Synth-	X				
10.06.2016	A-g	Lubrication Engineers	Powergrid™ Wind Syn	X				
10.06.2016	A-a	Petromin Corporation	Gear Lube EPF XXX	X				
02.06.2016	A-a	SINOPEC	Great Wall AP	X				
31.05.2016	A-c	BASF	Emgard Wind P XXX	X				
31.05.2016	A-g	Fuchs	RENOLIN PentoGear 320WT	X				
12.05.2016	A-g	Lukoil Lubricants	LUKOIL STEELO Premium	X				
04.04.2016	A-a	Chevron	Meropa XL 680, 1000	X				
16.03.2016	A-a	Total	CARTER EP XXX	X				
25.02.2016	A-a	Mosil Lubricants	Gearlube SP-eXXX	X				
25.02.2016	A-g	TSI Supercool	Aira 320	X				
22.02.2016	A-a	ENI	Blasia FMP XXX	X				
22.02.2016	A-a	Shell	Omala S2 GX XXX	X				
08.02.2016	A-g	Citgo Petroleum Corp.	Citgear WT 320	X				
20.01.2016	A-a	Shanghai Hitecrun	HITECSYN MMP XXX	X				
24.11.2015	A-c	Lukoil Lubricants	OMV Gear SHG XXX					Lukoil Steelo S XXX
10.11.2015	A-ef	Castrol performance	Tribol FoodProof 1800 / XXX					Optileb GT 1800 / XXX
11.09.2015	H	Castrol	BioTac MP	X				
11.09.2015	H	Castrol	Biogrease EP 2			X		
11.09.2015	H	Castrol	Obeen UF 3			X		
11.09.2015	H	Castrol	Obeen UF 2					Optileb GR UF 2
11.09.2015	H	Castrol	Longtime PD 2					Tribol GR 100-2 PD
11.09.2015	H	Castrol	Tribol 4020/220-2					Tribol GR 4020/220-2
03.08.2015	K	table K added						
23.07.2015	H	Mobil	Mobiltemp SHC100		X			
23.07.2015	H	Klüber	Petamo GHY 133 N		X			
21.07.2015	A-c	Fuchs	RENOLYN UNISYN XT XXX	X				
21.07.2015	A-c	SINOPEC	Great Wall 4408 HD XXX	X				
20.07.2015	A-a	HINDUSTAN PETROLEUM	PARTHAN EP XXX MA	X				
17.07.2015	A-b	Castrol performance	Optileb GT 1800 / XXX		X			
06.07.2015	A-a	OMV Refining & Marketing	OMV gear HAST XXX					OMV gear HST
16.06.2015	A-b, B-b	Castrol performance	Optigear Synthetic 1300 / XXX		X			
16.06.2015	A-ef	Castrol performance	Tribol FoodProof 1800 / XXX		X			
11.06.2015	A-a	Fuchs	RENOLIN HighGear XXX	X				
11.06.2015	A-b	PAKELO	No Tox Oil PG XXX	X				
11.06.2015	A-b	PAKELO	Allsint HS XXX	X				
30.04.2015	A-d	Fuchs	PLANTOGEAR 320 S		X			
22.04.2015	A-c	BASF	Emgard Wind P XXX	X				
09.03.2015	A-c	BASF	Emgard Gear Ultra XXX			X		
05.03.2015	A-a	Total	CARTER EP XXX			X		
05.03.2015	A-a	STATOIL	Loadway EP XXX	X				
05.03.2015	A-c	Qingdao Copton Techn.	COPTON SHC Gear Series XXX	X				
23.01.2015	A-a	BayWa AG	Tectrol Gear CLP Plus XXX	X				
20.01.2015	A-b, B-b	Q8 Kuweit Petroleum	Q8 Gade SF XXX	X				
20.01.2015	A-a	Q8 Kuweit Petroleum	Q8 Goya NT XXX			X		
19.01.2015	A-c	SINOPEC	Great Wall WT Gearbox Oil XXX	X				
19.01.2015	A-c	Bantleon	Avilub Gear SX XXX	X				
19.01.2015	A-c	Gulf Oil International	Gulf EP Lubricant SY XXX	X				
16.01.2015	A-a	SINOPEC	Great wall 4407 Heavy-Duty Industrial Gear Oil XXX	X				
09.01.2015	A-c	MOTOREX	GEAR SINTEC CLP 680	X				
09.01.2015	A-c	MOTOREX	GEAR SINTEC CLP 150			X		
08.01.2015	A-b	MOTOREX	MOTOREX GEARSYNT XXX	X				
19.12.2014	A-c	Shell	Shell Omala S4 GX XXX			X		
18.12.2014	B-b	Repsol	Super Tauro PAG XXX			X		
18.12.2014	A-b	BayWa AG	TECTROL GEAR CLP PG XXX	X				
17.12.2014	A-c	Lubritech Limited	GEP Synogear Super CKT XXX	X				
09.12.2014	A-b, B-b	Castrol performance	Tribol 1300 / xxx		X			
28.11.2014	A-a	Verkol	COMPOUND MP XXX			X		
28.11.2014	A-b	Lubrication Engineers	SYNPAG™ XXX			X		
28.11.2014	A-b, B-b	Chevron	Synlube WS XXX			X		

Date	Table	Brand name	Lubricant name	new approval	approval with restricted validity	approval is withdrawn	Brand name changed in	Lubricant name changed in
28.11.2014	A-b	STATOIL	LoadWay PG XXX			X		
28.11.2014	A-b	LOTOS OIL	Transmil Synthetic Extra PG XXX			X		
28.11.2014	A-c	AVIA	AVIA Syntogear PE XXX	X				
27.11.2014	A-c	BayWa AG	TECTROL GEAR CLP SYN XXX	X				
21.11.2014	A-a	MOTOREX					GEAR COMPOUND PLUS XXX	GEAR COMPOUND PLUS ISO XXX
07.11.2014	A-c	Shanghai Hitecrun	HITECSYN SMP Plus XXX	X				
28.10.2014	A-b, B-b	Fuchs Lubritech	GEARMASTER PGP 100 GEARMASTER PGP 150			X		
28.10.2014	A-c	Fuchs Lubritech	GEARMASTER SYN 100 GEARMASTER SYN 150 GEARMASTER SYN 220 GEARMASTER SYN 1000			X		
27.10.2014	A-a	HINDUSTAN PETROLEUM	PARTHAN ML XXX	X				
27.10.2014	A-a	PANOLIN AG	GEAR CLP FL XXX	X				
21.10.2014	A-a	Bharat Petroleum Corp. Ltd.	MAK Amocam Plus XXX	X				
05.09.2014	A-d	Bremer & Leguil GmbH	RIVOLTA S.G.L. XXX			X		
29.09.2014	A-a	LOTOS OIL S.A.	TRANSMIL EXTRA XSP 150			X		
29.09.2014	A-c	PANOLIN AG	TECSYNTH FL 220	X				
05.09.2014	A-d	Fuchs	PLANTOGEAR XXX S			X		
05.09.2014	A-d	Fuchs Lubritech	Gearmaster ECO XXX			X		
06.08.2014	A-c	Engen Petroleum Ltd.	Gengear SPL A-XXX	X				
22.07.2014	A-a	Statoil	Loadway EP XXX			X		
22.07.2014	A-a	ENI	Agip Blasia FMP XXX			X		
14.07.2014	A-c	Lukoil Lubricants	OMV Gear SHG XXX	X				
11.07.2014	A-a	Cogelsa	ULTRAGEAR EP XXX	X				
23.06.2014	A-ef, B-e	Fuchs	CASSIDA FLUID WG XXX	X				
18.06.2014	A-ef, B-e	Setral Chemie GmbH	SYN-setral-GEAR/PGB...FD	X				
26.05.2014	A-c	PTT Public Company	PTT Drivera Synthetic S XXX	X				
26.05.2014	B-b	MOL-LUB Ltd	MOL Ultrans Synt WS XXX	X				
26.05.2014	A-b	MOL-LUB Ltd	MOL Ultrans Synt WS 150			X		
09.05.2014	A-c	ORLEN OIL	TRANSGEAR PE 1000			X		
06.05.2014	H	Klüber	CENTOPLEX GLP 402			X		
10.03.2014	A-b, B-b	Fuchs	RENOLIN PG 100 RENOLIN PG 150			X		
05.03.2014	A-c	Cogelsa	ULTRASYNT EP xxx	X				
24.02.2014	A-c	LOTOS OIL S.A.	TRANSMIL SYNTHETIC xxx			X		
24.02.2014	A-c	AVIA	SYNTOGEAR PE XXX			X		
24.02.2014	A-c	AVIA	EVOGEAR SX xxx			X		
24.02.2014	A-a	Nyco S.A.	NYCOLUBE 83xx			X		
17.02.2014	A-a	Gulf Oil International	Gulf Gear WT xxx	X				
14.02.2014	B-e	Blaser Swisslube	Foodoil GGF xxx	X				
12.02.2014	A-a	Chevron	Meropa XL	X				
06.01.2014	A-a	Fuchs Lubritech	GEARMASTER CLP 100			X		
21.01.2014	A-c	Fuchs	RENOLYN UNISYN CLP 100 RENOLYN UNISYN CLP 150 RENOLYN UNISYN CLP 220			X		
13.01.2014	A-c	PETROGAL	GALP TRANSGEAR SY FA xxx	X				
10.01.2014	A-a	PETROGAL	GALP TRANSGEAR FA xxx	X				
02.01.2014	A-c	Bel-Ray	Synthetic Gear Oil 669x					Synthetic Gear Oil xxx
18.12.2013	B-e	Castrol performance	Tribol FoodProof 1800 / 460	X				
13.12.2013	A-c	Addinol	Eco Gear PAO 68 S	X				
13.12.2013	A-ef	Castrol performance	Tribol FoodProof 1800 / 460	X				
08.11.2013	A-c	Bel-Ray	Bel-Ray Synth. Gear Oil 66xx					Synthetic Gear Oil 669x
08.11.2013	A-c	Bel-Ray	Bel-Ray Synth. Gear Oil 6698			X		
08.11.2013	A-c	Bel-Ray	Bel-Ray Synth. Gear Oil 6688			X		
08.11.2013	A-c	SINOPEC	Great Wall Synth. AP-HD xxx					Great Wall AP-S xxx
08.11.2013	A-c	SINOPEC	Great Wall Synth. AP-HD 1000			X		
07.10.2013	A-c	Castrol classic	Alphasyn EP xxx	X				
16.08.2013	A-c	Phillips 66	SYNCON® WTL 320	X				
13.08.2013	A-c	Anderol	Anderol 5xxx Plus	X				
29.07.2013	A-c	SINOPEC	Great Wall SH5 xxx (FD) Synthetic			X		

Date	Table	Brand name	Lubricant name	new approval	approval with restricted validity	approval is withdrawn	Brand name changed in	Lubricant name changed in
01.07.2013	A-a	OMV Refining & Marketing	OMV gear HAST xxx	X				
01.07.2013	B-e	BASF	Breox FGL xxx					Plurasafe GL FG xxx
28.06.2013	A-a	OMV Petrol Ofisi	Gravis MP xxx	X				
28.06.2013	A-c	OMV Petrol Ofisi	Gravis SP xxx	X				
27.06.2013	A-b	FRAGOL	Ucolub BSL-IG xxx			X		
27.06.2013	A-ef	FRAGOL	Ucolub BSL xxx			X		
27.06.2013	A-b	Gulf Oil International	Gulf Synthetic Gear Oil xxx			X		
25.06.2013	A-a	Cepsa	ENGRANAJES XMP xxx	X				
24.06.2013	A-a	Cepsa	AEROGEAR 320	X				
11.06.2013	A-c	HINDUSTAN PETROLEUM	PARTHAN SL XXX			X		
07.06.2013	A-a	Fuchs	RENOLIN CLP Plus xxx	X				
04.06.2013	A-c	AVIA	SYNTOGEAR PE 1000			X		
04.06.2013	A-c	Cepsa	AEROGEAR SYNT 680			X		
28.05.2013	A-c	Amsoil	Amsoil Power Transmission EP 680; Amsoil Power Transmission EP 1000			X		
28.05.2013	A-c	Amsoil	Amsoil Power Transmission EP xxx					Synthetic Power Transmission EP Gear Oil xxx
24.05.2013	A-c	Total	CARTER SH 150			X		
21.05.2013	A-b	Repsol	Super Tauro PAG xxx			X		
08.05.2013	A-a	Gazpromneft	Reduktor F xxx					Gazpromneft Reductor F xxx
30.04.2013	A-a	LOTOS OIL S.A.	TRANSMIL EXTRA XSP xxx	X				
29.04.2013	A-ef	BASF	Breox FGL xxx					Plurasafe GL FG xxx
26.04.2013	A-b, B-b	BASF	Breox SL xxx					Plurasafe GL Plus xxx
23.04.2013	H	Shell	Alvania EP / LF x			X		
19.03.2013	A-a	Indian Oil	Servomesh Gold xxx	X				
18.03.2013	A-a	Bantleon	Avilub Gear RSX-F xxx	X				
18.03.2013	A-a	TOTAL	CARTER XEP xxx	X				
15.03.2013	E-am	AVIA	GEAR RSX 150			X		
15.03.2013	E-am	Castrol classic	Alpha SP 150			X		
15.03.2013	E-am	Chevron	GEAR COMPOUND 150			X		
15.03.2013	E-am	Eni	Agip Blasia FMP 150			X		
15.03.2013	E-am	TOTAL	GIRAN L 150			X		
15.03.2013	E-am	TOTAL	EPONA Z 150			X		
15.03.2013	E-cm	Mobil	Mobil SHC 629	X				
15.03.2013	E-dm	Fuchs	PLANTOGEAR 150 S	X				
15.03.2013	E-dm	Fuchs Lubritech	GEARMASTER ECO 150	X				
14.02.2013	A-c	Chevron	Meropa Synthetic XL xxx			X		
18.01.2013	A-c	Indian Oil	Servosyngear AMP xxx			X		
18.01.2013	A-c	Verkol	CORVUS MP xxx			X		
18.01.2013	A-c	Zetalube	ZetaLube 230 ISO VG xxx			X		
18.01.2013	A-c	Whitemore	Decathion™ F 320			X		
18.01.2013	A-c	Shenyang Original	Original SHG Extratrans xxx			X		
18.01.2013	A-c	Bantleon	Avilub Gear PAO xxx			X		
18.01.2013	A-c	Petrofer	GEARLUBRIC HC xxx			X		
18.01.2013	A-c	Industrial Quimica Rio.	MatraX I-Gear Sintesis FDR xxx			X		
18.01.2013	A-c	SK Lubricants	SYNGEAR WT xxx			X		
18.01.2013	A-c	Omega	Omega 693			X		
18.01.2013	A-c	KRAFFT	KROIL SINTLUBE 320 MP			X		
09.01.2013	A-a	Pertamina	MASRI SUPER FLG xxx	X				
07.01.2013	A-a, E-am	Shell	Omala F xxx			X		
17.12.2012	Integration of the separate CLP oil tables for 'Marine gear units without multi-disk clutches' in the CLP oil tables for 'FLENDER Helical gear, bevel helical gear, planetary gear boxes and geared motors'							
17.12.2012	E-cm	Total	CARTER SH 150			X		
30.11.2012	A-a, E-ao	Fuchs	RENOLIN CLP 100			X		
30.11.2012	A-a, E-ao, E-am	Fuchs	Renolin CLP xxx Plus			X		
12.10.2012	A-a	Repsol	Super Tauro FND xxx			X		

Date	Table	Brand name	Lubricant name	new approval	approval with restricted validity	approval is withdrawn	Brand name changed in	Lubricant name changed in
05.10.2012	A-b, B-b	Castrol	Alphasyn GS xxx			X		
05.10.2012	B-e	Castrol	Tribol FoodProof 1800 / xxx			X		
27.09.2012	A-c, E-co	Klüber	Klübersynth. GEM 4 - xxx N			X		
31.07.2012	A-a	Setral Chemie GmbH	Mi-setral-GEAR xxx	X				
31.07.2012	A-c	Setral Chemie GmbH	SYN-setral-GEAR xxx	X				
30.07.2012	A-a	Gazpromneft	Reduktor F	X				
05.07.2012	A-a	BP	Energol GR-XP	X				
19.06.2012	A-a	MOL-LUB Ltd.	MOL Ultrans EP	X				
04.06.2012	A-a	Castrol	Alpha SP 1000			X		
01.06.2012	A-a, B-a	Castrol performance	Optigear BM 100			X		
01.06.2012	A-a, B-a	Castrol performance	Optigear BM 680			X		
01.06.2012	A-a, B-a	Castrol performance	Optigear BM 1000			X		
19.03.2012	A-d, E-do	Shell	Naturelle Gear Fluid EP xxx			X		
14.03.2012	A-a	Klüber	Klüberoil GEM1-100 N			X		
14.03.2012	A-a	Klüber	Klüberoil GEM1-1000 N	X				
14.03.2012	B-a	Klüber	Klüberoil GEM1-xxx N			X		
14.03.2012	B-b	Klüber	SYNTHESO D xxx EP			X		
14.03.2012	A-b, B-b	Klüber	Klübersynth. GH 6 - 150			X		
13.03.2012	A-a	Addinol	ECO GEAR 100 M			X		
13.03.2012	A-c	Addinol	ECO GEAR 100 S			X		
13.03.2012	A-c	Addinol	ECO GEAR 150 S			X		
06.03.2012	A-d, E-do	Klüber	Klübersynth. GEM 2 - xxx			X		
07.02.2012	A-a	Engen Petroleum Ltd.	Engen Gengear XEP xxx	X				
24.01.2012	A-c	Anglomoil	Indsyn EP xxx			X		
24.01.2012	A-b, E-co	Q8 Kuweit Petroleum	Q8 El Greco xxx			X		
24.01.2012	table numbering changed (old black coloured, new red coloured) : A-1 → A-a; A-2 → A-b; A-3 → A-c; A-4 → A-d; A-5 → A-ef B-1 → B-a; B-2 → B-b; B-5 → B-e E-1 → E-ao; E-3 → E-co; E-4 → E-do; E-6 → E-g; E-7 → E-am; E-8 → E-cm; E-9 → E-dm							
23.01.2012	A-a	ORLEN OIL	TRANSOL PREMIUM xxx			X		
23.01.2012	A-b, B-b	Shell	Shell Omala S4 WE xxx			X		
23.01.2012	A-a	Cepsa	CEPSA AEROGEAR xxx			X		
05.12.2011	E-cm	Mobil	Mobil SHC 629			X		
05.12.2011	A-c	Petro Canada	Enduratex Synthetic					Enduratex Synthetic EP
30.11.2011	A-c	Verkol	Corvus MP xxx	X				
29.11.2011	A-c	KRAFFT S.L.U.	KROIL SINTLUBE 320 MP	X				
16.11.2011	A-c	MOTOREX	GEAR SYNTEC CLP 100			X		
16.11.2011			GEAR SYNTEC CLP 680			X		
16.11.2011			GEAR SYNTEC CLP 1000			X		
10.11.2011	A-a	Castrol	Alpha BMB xxx			X		
10.11.2011	A-c, E-co	Castrol	Alphasyn EP xxx			X		
10.11.2011	E-co, E-cm	Castrol	Alphasyn HG xxx			X		
10.11.2011	E-do, E-dm	Castrol	BioTrans HG xxx			X		
10.11.2011	A-c	Castrol	Optigear Synth A xxx			X		
10.11.2011	A-c, E-co	Castrol	Tribol 1710/xxx			X		
10.11.2011	B-b	Castrol	Tribol 800 / xxx			X		
10.11.2011	A-a, B-a, E-ao	Castrol	Tribol 1100/ xxx			X		
10.11.2011	A-ef	Castrol	Optileb GT xxx			X		
04.11.2011	A-b, B-b	BECHEM	BERUSYNTH EP xxx			X		
27.10.2011	A-a	LLC LLK International	LUKOIL STEELO 680			X		
27.10.2011	A-c	Omega Manufac.	Omega 693	X				
27.10.2011	A-c	SK Lubricants	SYNGEAR WT	X				
26.10.2011	A-c	Hermann Bantleon GmbH	Avilub Gear PAO 320	X				
26.10.2011	A-c	Ind. Quimica Riojana S.A.	MatraX I-Gear Sintesis FDR	X				
24.10.2011	E-do	Bremer & Leguil GmbH	RIVOLTA S.G.L.	X				
27.09.2011	A-b, B-b	Cognis	Breox SL xxx				BASF	

Date	Table	Brand name	Lubricant name	new approval	approval with restricted validity	approval is withdrawn	Brand name changed in	Lubricant name changed in
27.09.2011	A-ef, B-e	Cognis	Breox FGL xxx				BASF	
27.09.2011	A-c	Cognis	Emgard Gear Ultra xxx				BASF	
13.09.2011	A-c	Galp Energia	Galp Transgear SMP xxx			X		
13.09.2011	A-a	OMV Refining & Marketing	OMV gear HAST xxx			X		
13.09.2011	A-c	Brugarolas	Beslux Gearsint XP xxx			X		
13.09.2011	A-b	Brugarolas	Beslux Sincart W xxx			X		
13.09.2011	A-c	Verkol	Corvus MP xxx			X		
13.09.2011	A-c	Statoil	MERETA xxx			X		
12.09.2011	A-a	Addinol	CLP xxx S			X		
12.09.2011	A-a	Addinol	Gear Oil xxx F	X				
12.09.2011	A-a	Total	KASSILLA GMP xxx			X		
12.09.2011	A-ef	Total	Nevastane SY xxx			X		
12.09.2011	A-a, E-ao, E-am	Chevron	Meropa WM xxx			X		
18.07.2011	A-a	Verkol	COMPOUND MP xxx	X				
01.07.2011	A-d, E-do	Shell	Shell Naturelle Gear Fluid EP xxx			X		
28.06.2011	A-c	Castrol performance	Optigear Synth X xxx			X		
27.05.2011	A-c	Chevron	Meropa Synthetic XL	X				
27.05.2011	A-b	AVIA	GEAR VSG xxx			X		
27.05.2011	A-c	Anderol	5xx0 XEP			X		
27.05.2011	B-a	SRS	Ersolan xxx			X		
27.05.2011	A-a	TUNAP	TUNGEAR xxx			X		
27.05.2011	A-a	Verkol	COMPOUND MP xxx			X		
27.05.2011	A-a	Veco	VECO MATRANOL XP xxx			X		
27.05.2011	A-c	FRAGOL	Ucolub N-PA xxx			X		
27.05.2011	A-a	LE	60x ALMASOL Vari-P G.L.			X		
24.05.2011	A-a, B-a, E-ao	Mobil	Mobilgear XMP xxx			X		
24.05.2011	D --> H	table 'D' changed in table 'H'						
24.05.2011	A-b	Castrol performance	Tribol 1300 / xxx				Fußnote hinzu	
04.04.2011	Ax, Bx, D --> H, Ex	obligation added						
24.03.2011	A-c	Meguin	Megol Gearoil Synth			X		
08.02.2011	A-a	Aral	Degol BMB xxx				Castrol Classic	Alpha BMB xxx
08.02.2011	A-b, B-b	Aral	Degol GS xxx				Castrol Classic	Alphasyn GS xxx
08.02.2011	E-co	Aral	Degol PAS xxx			X		
08.02.2011	E-do	Aral	Degol BAB xxx			X		
08.02.2011	D --> H	Aral	Aralub HL x			X		
08.02.2011	A-a, B-a, E-ao, E-am	BP	Energol GR-XP xxx			X		
08.02.2011	A-c, E-co	BP	Enersyn EG-XF xxx			X		
08.02.2011	E-do	BP	BIO GEAR xxx			X		
08.02.2011	E-g	BP	Energol HPDX 40			X		
08.02.2011	A-a	Castrol Classic	Alpha MAX xxx			X		
08.02.2011	A-b	Castrol performance	Tribol 800 / xxx			X		
08.02.2011	B-b	Castrol performance	Optiflex A xxx			X		
01.02.2011	A-c	Bantleon	Avilub Gear PAO xxx	X				
21.01.2011	A-a	Delta Oil	EP Industrial G xxx			X		
21.01.2011	A-a, B-a, E-ao, E-am	Aral	Degol BG xxx Plus			X		
21.01.2011	A-b, B-b	BP	Enersyn EG-XP xxx			X		
18.11.2010	A-b, B-b	Shell	Tivela S xxx					Omala S4 WE xxx
22.06.2010	A-c, E-co	Shell	Omala HD xxx					Omala S4 GX xxx

Start 22.06.2010